Preliminary Report and Findings
Phase One Recommendations

August 2017

Prepared by:
Matthew A. Gibb
Deputy Oakland County Executive
with assistance and on behalf of the OCCV Task Force

TABLE OF CONTENTS

INTRODUCTION 3

I. KEY DEFINITIONS 4

WHAT ARE CONNECTED VEHICLES 4
WHAT ARE AUTOMATED VEHICLES 4
WHAT IS A CONNECTED INFRASTRUCTURE ENVIRONMENT 5
WHAT ARE SOME KEY ACRONYMS 5

II. SUMMARY OF KEY FINDINGS 6

a) GOVERNMENT IS AT RISK OF LOSING CONTROL 6
b) IT IS A PITFALL TO TRY AND "BUNDLE" EXISTING TECHNOLOGY 6
c) WAVE STANDARDS CONSTITUTE A ROBUST, OPEN ARCHITECTURE PLATFORM 7
d) DSRC WORKS AND IS TESTED 8
e) INNOVATION REQUIRES A SKILLED WORKFORCE 8
f) THE CHALLENGE IS NOT THE TECHNOLOGY 8
g) THE BUSINESS CASE STARTS IN THE AFTERMARKET 9
h) THERE MUST BE BOTH AN ORGANIZATIONAL AND TECHNOLOGICAL SOLUTION CONCURRENTLY 10

III. THE BUSINESS CASE 10

IV. PHASE ONE RECOMMENDATIONS 13

1. CONDUCT A TECHNICAL DEMONSTRATION AT THE 2017 ITS WORLD CONGRESS IN MONTREAL 13
2. SECURE EXECUTION OF INTERGOVERNMENTAL AGREEMENTS AND SUB-PARTICIPATION AGREEMENTS CREATING A CONTRACT BASED REGIONAL DEPLOYMENT AUTHORITY FOR OAKLAND COUNTY 14
3. RELEASE AN RFP SEEKING PROPOSALS TO FURTHER THE OBJECTIVES OF THIS REPORT AND DEPLOY A PILOT NETWORK 23
4. ALLOCATE BUDGET SUPPORTING RFP ACCEPTANCE AND PILOT DEPLOYMENT 27

CONCLUSION AND SUMMARY OF RECOMMENDATIONS 28

INTRODUCTION

In 2014 Oakland County Executive, L. Brooks Patterson, announced the formation of the Oakland County Connected Vehicle Task Force. The Task force commenced with the executive appointment of Mr. Fred Nader, principal at Kenmar Corporation in Southfield, Michigan. Mr. Nader quickly joined with Deputy County Executive Matthew Gibb and the two lead an effort to find and secure the participation of several dedicated experts. The volunteer based group began work on its charge of developing a business model for the deployment of connected mobility infrastructure in and around Oakland County, Michigan in a manner that both captures potential private funding and revenue sources and sustains the extensive economic impact of the network of mobility companies thriving in the County.

The Task Force executive committee members align with several basic premises of a comprehensive plan for mobility deployment.

1. There must be technical expertise:
    a. **Fred Nader**, KENMAR, engineering and industry
    b. **Martin Nathanson**, PAXGRID, engineering design and WAVE technology
    c. **Gregory Krueger**, HNTB, civil engineering and system design
2. There must be automotive expertise:
    a. **Paul Haelterman**, IHS, industry knowledge
    b. **Jeff Varick**, BRAND MOTION, automotive connectivity
    c. **Praveen Singh**, ARADA LEAR, software and RSU connectivity
3. There must be training and certification:
    a. **Elaina Farnsworth**, MOBILECOMPLY, advanced certified training
4. There must be infrastructure planning and oversight:
    a. **Ahmad Jawad**, RCOC, civil engineering and design
    b. **Gary Piotrowicz**, RCOC, general transportation systems
5. There must be government and policy expertise:
    a. **Matthew Gibb**, Oakland County, government relations, law, and policy.

In addition to executive leadership, many talented individuals assist in the thought process, trouble shooting, design, and conception of a potential business model and deployment plan for connected mobility. These individuals, leaders in their fields, continue to be invaluable in the vetting and coordination of the concepts outlined in this report; Doug Patton - DENSO, Kirk Steudle - MDOT, Michele Mueller – MDOT, Colin Castle – MDOT, Jim Santilli – TIA of Michigan, Dominic Paulraj – LEAR, Gary Streelman – Magnetti Morelli, Sue Bai – Honda, and Amine Taleb – Valeo.

I. KEY DEFINITIONS

What are Connected Vehicles?

Source U.S. DOT https://www.its.dot.gov/research_areas/WhitePaper_connected_vehicle.htm

The Connected Vehicle concept refers to the capability of the various elements of the modern surface transportation system (personal, transit, and freight vehicles, pedestrians, bicyclists, roadside infrastructure, transportation management centers, etc.) to electronically communicate with each other on a rapid and continuous basis. No personally identifiable information is shared between the vehicles. This communication can occur via several mechanisms. Dedicated short-range communications (DSRC) allow rapid communications (up to 10 times per second) between elements of a connected vehicle network, in particular for safety critical applications. Cellular phone technology is also anticipated to facilitate the use of many connected vehicle concepts. With safety as a primary goal, connected vehicle technology is anticipated to aid motorists in actively avoiding crashes and other incidents. Connected vehicle technology is distinct from vehicle automation.

What are Automated Vehicles?

Source: National Highway Traffic Safety Administration Federal Automated Vehicles Policy - September 2016

Fully automated (sometimes called autonomous) or "self-driving" vehicles are defined by the U.S. Department of Transportation's National Highway Traffic Safety Administration (NHTSA) as "those in which operation of the vehicle occurs without direct driver input to control the steering, acceleration, and braking and are designed so that the driver is not expected to constantly monitor the roadway while operating in self-driving mode." The SAE definitions divide vehicles into levels based on "who does what, when." Generally:

> Level 0: The human driver does everything.
> Level 1: An automated system on the vehicle can sometimes assist the human driver conduct some parts of the driving work.
> Level 2: An automated system on the vehicle can actually conduct some parts of the driving task, while the human driver continues to monitor the driving environment and performs the rest of the driving task.
> Level 3: An automated system can both actually conduct some parts of the driving task and monitor the driving environment in some instances, by the human driver must be ready to take back control when the automated system requests.
> Level 4: An automated system can conduct the driving task and monitor the driving environment, and the human need not take back control, but the automated system can operate only in certain environments and under certain conditions.
> Level 5: The automated system can perform all driving tasks, under all conditions that a human driver could perform them.

What is a Connected Infrastructure Environment?

Vehicle-to-infrastructure (V2I or v2i) is a communication model that allows vehicles to share information with the components that support a highway system. Such components include overhead RFID readers and cameras, traffic lights, lane markers, streetlights, signage and parking meters. V2I communication is typically wireless and bi-directional: data from infrastructure components can be delivered to the vehicle over an ad hoc network and vice versa. Similar to vehicle-to-vehicle (V2V) communication, V2I uses DSRC frequencies to transfer data.

In an intelligent transportation system (ITS), V2I sensors can capture infrastructure data and provide travelers with real-time advisories about such things as road conditions, traffic congestion, accidents, construction zones and parking availability. Likewise, traffic management supervision systems can use infrastructure and vehicle data to set variable speed limits and adjust traffic signal phase and timing (SPaT) to increase fuel economy and traffic flow. The hardware, software and firmware that make communication between vehicles and roadway infrastructure are an important part of all driverless car initiatives.

What are Some Key Acronyms?

RSU Roadside Unit (RSU). A Roadside Unit is a DSRC transceiver that is mounted along a road or pedestrian passageway. An RSU may also be mounted on a vehicle or is hand carried, but it may only operate when the vehicle or hand carried unit is stationary. A RSU broadcasts data to OBUs or exchanges data with OBUs in its communications zone. An RSU also provides channel assignments and operating instructions to OBUs in its communications zone, when required.

OBU On Board Unit. The OBUs are the vehicle side of the V2I system and is the same physical device used for V2V communication. An OBU is logically composed of one or more DSRC radio transceivers, a GPS system, an applications processor and interfaces to vehicle systems and the vehicle's human machine interface (HMI). OBUs provide the communications between the vehicle and neighboring devices, both stationary RSUs, and mobile OBUs (other vehicles).

HMI Human Mechanical Interface. HMI, in its simplest terms, includes any device or software that allows you to interact with a machine. This can be as simple and ubiquitous as the traditional single-touch display mounted on a machine or as technologically advanced as a multi-touch-enabled control panel or even connected mobile technology such as smartphones and smartwatches.

II. SUMMARY OF KEY FINDINGS

The solutions outlined in this report are not derived solely from mathematics or engineering. The recommendations arise from the following findings, each of which is integral to the recommendations in this report.

a) Government is at risk of losing control. The work of the task force really comes down to a single question: how does the government preserve its ability to protect and enhance public safety on its roadways while advancing new transportation technologies? It seems simple, but there is a misguided presumption among government officials, transportation departments, road commissions and others that public right of way (ROW) and its regulation is the controlling aspect of roadway safety. Connected vehicle technology renders that presumption moot and demands the conclusion that transportation safety is no longer about the dirt a public body owns, roadway design, or the color and placement of visual signs. **Public safety is about airspace and the control of the broadband spectrum that exists within it**.

   It is not feasible, nor smart, to assign to a third party communications entity access and use of public rights of way in an attempt to implement safety related infrastructure and messaging. Private corporations are not in business to prioritize safety, and the means to control safety prioritizations of channels or messaging must remain within control of a publicly based entity or authority. The communications industry is fighting for additional spectrum and access to ROW for two basic reasons:

   (i) The DSRC bandwidth is valuable for consumer driven commercialization and; (ii) ROW is "free dirt" not subject to traditional regulation. The hope that the industry would add incident management, crash avoidance oversight or any other public sector responsibility, at the expense of the shareholders is an untenable argument. Any such prioritization would require a government mandate for which there is currently no present authority.

b) It is a pitfall to try and "bundle" existing technology. There are methodologies being reviewed in other parts of the United States that attempt to simply merge existing transportation technologies and label that effort a "connected vehicle system." The assertion that the combined use of electronic tolling, adaptive construction signage and camera-based event detection systems constitutes a connected infrastructure environment is misguided, if not unsafe and expensive. The challenge facing many of the USDOT pilot areas, and the Smart City efforts like that in Columbus, Ohio is the common default to traditional transportation design and funding. They simply want to deploy separate and individual management-based technologies. That general model identifies what

transportation engineers want, but fails to take into account the consumer and results in concepts looking at the "types" of signals and not how to manage the data that they produce. The concept of combining multistep design processes and asking for traditional road funding allocations is an unfeasible model. While those pilot areas are experiencing quantifiable results in data and research, none is looking at how to deploy beyond the test. Certainly, no one is looking at cost.

The focus of a strategy for deployment of connected infrastructure cannot be how to coordinate basic transportation technology; rather it must be focused on the development of a network architecture where any technology can be layered to meet a consumer need. The presence of government-owned, but third party administered, DSRC networks allow for regional authorities to layer both common technologies like multi-lane tolling with consumer experiences like in car Wi-Fi. It is the layering of the consumer-based demand that will drive funding allocations. The caution is simple: any government-based deployment strategy must avoid the idea that government can singularly choose what technology is best. Any strategy must simply provide the network and allow safety and market demands to define themselves.

c) <u>WAVE standards constitute a robust, open architecture platform</u>.

Understanding the need to find a network architecture that would accept multiple technologies and allow authorities to redefine ROW oversight, we simplified the direction and turned to WAVE. It was recognized that WAVE allows IPv6 packets to be carried on DSRC service channels, and routed to the internet by RSUs. The Task Force began, in March 2014, to focus on the concept of enabling IPv6 connectivity for consumer devices tethered to OBUs. Offering this form of connectivity for consumer devices was seen as a path to delivering monetized services and a business model to sustain a financially viable deployment of DSRC infrastructure.

This concept encountered considerable skepticism from influential stakeholders, including an important Tier 1 automotive supplier. The primary problem was that it was misinterpreted as yet another assault on the DSRC spectrum, similar to the spectrum-sharing proposals from Qualcomm and Cisco, which were beginning to be perceived at the time, justifiably, as a growing threat. Our objective of crafting a business model to sustain a market-driven deployment of DSRC infrastructure was not sufficiently appreciated then, many DSRC vendors seemingly unconcerned with the dilemma of infrastructure funding ("not our problem"). The skepticism was further entrenched by a widespread "purist" attitude among DSRC stakeholders that the spectrum, having been set aside for ITS applications, must never be used for commercial purposes. That attitude has since dramatically changed, with the growing realization among DSRC stakeholders that the FCC needs evidence that the spectrum is being actively used, and that a viable

business rationale for DSRC infrastructure deployment can be instrumental in accelerating market penetration.

d) DSRC works and is tested. The associated WAVE (wireless access vehicular environment) standards developed by the IEEE (derived from the protocol standards for Wi-Fi), constitutes an open platform for vehicular wireless communication. While Wi-Fi 33 is used mainly for wireless Local Area Networks, DSRC is intended for highly secure, high-speed wireless communication between vehicles and the infrastructure. The latency of cloud-based applications does not work in safety environments and the notorious 5G network is not only not yet created, it is being multi branded and coopted by numerous commercial entities. NHTSA has properly issued a Notice of Proposed Rulemaking (NPRM) that V2V communication shall be conducted via DSRC. This is significant, as the automotive industry has based its V2V technologies in this spectrum. For safety to succeed, the 5.9GHz band allocated for ITS cannot be sold or divided and must remain an asset for use by government-based facilities managers and network operators.

e) Innovation requires a skilled workforce. A connected infrastructure system will require an engaged and continually trained workforce. Currently 1.5 million workers in transportation related fields are candidates for advanced training in connected vehicle technologies including infrastructure deployment and maintenance. These workers must be adaptable to ongoing introductions of new and emerging innovations in connected and autonomous vehicle technologies, and willing to embrace their use. As these technologies progress so will the need for enhancing the workforce with advanced skills, knowledge and abilities to drive implementation. Degree and certificate programs must be continually updated and training must evolve to meet the dynamic needs of connected vehicle and related transportation technologies.

f) The challenge is not the technology. The technology to create a connected network environment capable of using DSRC spectrum to relay messaging to and from vehicles exists. One may assume, therefore, that the challenge is deploying the technology in a manner that works and is affordable, but such an assumption would only be partially correct. The challenge lies in the scale of the deployment and the absolute requirement that everything must adhere to a standard that can be easily adopted throughout the United States and other jurisdictions aligned with DSRC-based technology. The challenge breaks down into some basic facts:

i. <u>The size of the network is prohibitive.</u>

- In Oakland County there are more than 5,600 miles of eligible roadway.
- In Oakland County there are more than 1,400 eligible intersections.

Hanging a dozen, or even a few hundred, RSU's throughout the county will not begin to cover the area necessary to create a connected vehicle environment that provides ubiquity in the network. Unlike when cellular technologies came to market in the 1990's there cannot be a slow roll out of the infrastructure supporting the communication. Therefore, any effort must be premised on a business model that allows for full deployment, or at least the means to reach that target through a proven revenue model supporting equity investment. To exemplify the scale of the challenge, if we assume that a deployed intersection with basic DSRC equipment will cost $10,000, the county needs more than $14 million to deploy on its own or in the absence of a revenue model that can be used for third party funding or investment. . Extrapolating these facts to our region or state, the real challenge begins to reveal itself.

ii. The number of jurisdictions to coordinate is daunting.

- In Oakland County 42 different jurisdictions have oversight of public ROW.

There cannot be 42 permitting and decision-making entities. It would take years to design and implement a network. Every jurisdiction must be part of a common team. Local intergovernmental authorities must plan, in compliance with a ubiquitously accepted standard, a government-controlled and third-party-administered open DSRC network that allows for managed use of the Internet-compatible part of the 5.9 GHz allocation to generate the revenue opportunities necessary to deploy at scale and maintain the infrastructure.

- <u>The business case starts in the aftermarket</u>. More than 220 million cars currently in the United States "car park" possess an OBII Data Port and more than 300 million vehicles operate on the roads. If North America continues to produce 16 million units per year, an assumption that is likely high, it will take more than 10 years to turn over the car park. Even with the natural turn over through OEM new car sales, it will be more than 20 years before entire product platforms have uniform safety capacity**. Waiting for an OEM solution does not create the scale of absorption among consumers that justifies the return on investment required to deploy infrastructure in a ubiquitous manner**. The DSRC/WAVE platform allows for low cost on-board units to be installed in aftermarket vehicles, where the so-called "Retrofit Safety Device" (RSD) version of these OBUs also protects the vehicle's OBD-II data port from cyber-attacks, and provides mobile Internet connectivity with a throughput potential equivalent to 4G LTE

(depending on the density of RSU deployment). This opens the consumer market for applications driving demand, creating safety by default.

- <u>There must be both an organizational and technological solution concurrently</u>. The Task Force recognizes that any model deployment must be broken into two direct efforts, working concurrently:

Organizational

- Create the organizational structure of a regional deployment authority.
- Define how technical specifications of deployment will be assigned and who will be in charge.
- Set an operational strategy with governing entities within the region.
- Establish sources of non-traditional funding.
- Encourage a role for the private sector.

Technological

- Advocate a "Controlled Spectrum Sharing" (CSS) policy to require that Network Operators maintain real-time dynamic control, at the individual RSU level, of which DSRC service channels are allocated, to IPv6 communications, and advertised as such to OBUs.
- Promote a framework in which authentication of consumer devices is tied to the USDOT-defined Security Credential and Management System.
- Promote "Controlled Spectrum Sharing" as a standards-compliant alternative to disruptive spectrum sharing solutions.
- Find ancillary applications dependent on DSRC to stimulate "after-market" adoption.

III. THE BUSINESS CASE

Excerpted from the OCCV Task Force submission to the FCC (dated June 29, 2016), in response to the Public Notice 16-68 requesting comment on the proposed DSRC spectrum sharing by U-NII devices.

The Oakland County Connected Vehicle Task Force was established with the express purpose of formulating a business model and a technological ecosystem, based entirely on the DNA of DSRC and the WAVE (IEEE 1609 and 802.11p) standards, whereby the different constraints under which the private and public sectors must operate are reconciled. As the jurisdiction with

the highest concentration of automotive industry corporate presence in the United States, our public officials are particularly well-placed to appreciate the needs of both sectors. There is an urgent desire to harness the full power of DSRC technology without imposing a burden on taxpayers, while simultaneously creating conditions that motivate the private sector to continue to invest in innovation built on the DSRC platform. The extraordinary level of response to the USDOT Smart Cities Challenge issued by Secretary Foxx clearly demonstrates that our goals reflect those of many other jurisdictions throughout the country.

From the outset, our view has been that the DSRC spectrum is essentially a public good which, if exploited in a way that maximizes its market value, provides the means to bridge the funding gap for deployment of roadside infrastructure that has been recognized by most DSRC stakeholders as the most important question needing resolution in order to move forward. We also believe that the tools required to accomplish this can be developed based on the inherent capabilities designed into the WAVE standards. Our formula for reaching these goals is straightforward:

- Propose the establishment of a regional public sector authority to oversee the deployment and maintenance of DSRC infrastructure

- Encourage the private sector to create tools to leverage the non-safety-critical DSRC channels (Service Channels), particularly aimed at exploiting the insatiable consumer demand for mobile wireless Internet services.

- Require all the access points (RSU) and clients (OBU) to adhere strictly to the existing 5.9 GHz DSRC communications protocol. This ensures that both non-safety of life and imminent crash avoidance applications are simultaneously supported as originally envisioned in the band plan and avoids compromising the substantial investment in development and testing incurred by both the federal government and the automotive industry during the last decade.

- Seek to establish policies placing a priority on the need for re-investment in DSRC infrastructure of revenues associated with provision of Internet connectivity services, while enabling the private sector to profit from development of the tools and their application in providing market-driven services.

- Create an ecosystem favorable to the rapid introduction of aftermarket on-board units (OBUs) which (we believe) is essential for accelerating the timetable by which the full benefits of DSRC V2V and V2I can be realized.

- Establish a foundation on which an infrastructure Authority and/or Network Operator can grow to encompass the region of southeast Michigan and hopefully demonstrate a functional model for other regions to follow.

- Demonstrate that this method can become a template for both inter-governmental cooperation, as well as public-private partnership that can be used throughout the United States.

The principal behind any business case is simple: for Oakland County or any regional authority to pay for and deploy a connected vehicle environment, it must own and control a DSRC network within its ROW. This basic premise is the foundation of any strategy that would seek to prioritize and preserve safety messaging while deriving revenue opportunities from implementation of the above-described goals. Owning the network allows government-based authorities to ensure safety messaging and allow access to the 5.9 GHz spectrum. The Task Force has called this policy approach "Controlled Spectrum Sharing," and believe it is the key to monetizing the network and enabling a framework to pay for it.

The Controlled Spectrum Sharing policy is intended to provide DSRC "Infrastructure Authorities" and associated "Network Operators" the tools to finance infrastructure deployment and operation (if desired) in a manner that is compliant with existing FCC licensing rules and IEEE/SAE specs for WAVE. We believe that this will accelerate infrastructure investment decisions by local road management authorities, create ecosystems to drive development of new value propositions for consumer aftermarket adoption of DSRC technology and encourage OEMs to follow GM's lead in bringing V2V to market in advance of National Highway Traffic Safety Administration (NHTSA) mandate. The Connected Spectrum Sharing solution, using IPv6 Neighbor Discovery mechanisms, will allow every OBU to become an "access point" ("hotspot") for consumer devices in the car (Smartphones or tablets).

The key is to avoid the pitfall of selecting a specific technology as a source of revenue. Instead understanding the value of owning a DSRC network that can be operated by a third party administrator in a manner that derives revenue to Oakland County (or the Regional Authority) and serves the commercial interests of the network administrator by allowing controlled access to spectrum. This creates a standards compliant method of DSRC financing and implementation.

IV. PHASE ONE RECOMMENDATIONS

1. CONDUCT A TECHNICAL DEMONSTRATION AT THE 2017 ITS WORLD CONGRESS IN MONTREAL

ITS America is one of the nation's leading policy advocates for the technological modernization of our transportation system. The organization focuses on advancing research and deployment of intelligent transportation systems (ITS) and is a member institute to a worldwide consortium of ITS chapters and collaborative business units seeking solutions allowing the rapid additions of safety and efficiency to our transportation infrastructure. Each year more than ten thousand companies, organizations and individuals committed to advancing intelligent transportation solutions gather in a world congress. The Task Force has actively participated in each of the last three world congress gatherings: Detroit, Bordeaux and Melbourne.

Even though there were no formal technical obstacles to doing so, in 2014 the Task Force was unable to persuade DSRC vendors to implement a proof-of-concept for general-purposed internet communications from a consumer device through an OBU. Therefore as an alternative, at the ITS World Congress in Detroit, the Task Force collaborated with several companies including HERE, Cohda and T-Mobile to demonstrate vehicle geo-positioning based on tri-lateration of the RSSI (received signal strength indicator) of packets received by an OBU from each of two RSUs. This was combined with a Web-based presentation of a parking application, which demonstrated real-time notification of departure and occupancy of parking spaces. This showcase enabled the group to expand its contacts in the DSRC stakeholder community in order to continue to promote its primary concept of monetization of DSRC service channel spectrum, a lobbying effort which continued in Bordeaux in 2015.

Then in 2016, the Task Force took the initiative of responding to the FCC Public Notice 16-68 regarding the proposals for spectrum sharing in the DSRC band by U-NII (unlicensed national information infrastructure) devices, commonly known as 5 GHz Wi-Fi___33. (The previous section in the present document is the introduction to this FCC submission). Although the FCC was only soliciting commentary on the Cisco and Qualcomm proposals, we saw this as a strategic opportunity to disseminate our concept as an alternative far preferable to the proposals before the FCC. The result was the beginning of substantive recognition from important DSRC stakeholders such as AASHTO, OEMs such as Honda and Tier 1's such as Denso. This set the stage for a warmer reception in Melbourne and a labeling of our approach as "Controlled Spectrum Sharing" so as to emphasize that a public authority will always retain control of when and where DSRC channels are assigned to commercial purposes.

The 2017 ITS World Congress is in October in Montreal. The Task Force is coordinating with ITS America to explain the Controlled Spectrum Sharing (CSS) policy. CSS calls for DSRC

Infrastructure Authorities and associated Network Operators to maintain the ability to dynamically reconfigure the service channels advertised by an RSU as available for supporting IPv6 routing (i.e. mobile Internet services), subject to the prioritization of safety and mobility applications on these channels. The Task Force recognizes that an RSU will process configuration commands from a machine inside the network operator's firewall – i.e. the commands would always come from a trusted source. This will be demonstrated in partnership with a major Tier One supplier of DSRC solutions allowing us to show WAVE Service Advertisements created and broadcast by an RSU, based on its configuration parameters. USDOT guidelines call for re-configuration of an RSU by rebooting it after a "batch" change to its configuration parameter file. Our demonstration intends to show that CSS is simply the ability to dynamically change individual parameters on the fly, using standard SNMP techniques.

The scope of our planned demonstration is to present Controlled Spectrum Sharing on a closed route nearby the Conference Center using 4 RSU's, 2 Pedestrian wearable OBU's (for V2P/P2V) and a demo vehicle equipped with OBU and a virtual HMI running on a tablet/Smartphone. The HMI will display V2V, I2V, V2P, P2V, RSU service announcements, SPaT, parking, blind spot, collision, forward hard braking warnings. The RSU service announcements will instruct the OBU as to which service channels should be used for transmission and reception of mobile Internet (IPv6) traffic.

The proposed infrastructure deployment and associated road closures necessary for safe demonstration during ITS-WC is supported and coordinated by the city of Montreal. It is also our intention to allow other parties to use the proposed infrastructure during ITS-WC with coordination by the OCCV Task Force.

2. SECURE EXECUTION OF INTERGOVERNMENTAL AGREEMENTS AND SUB-PARTICIPATION AGREEMENTS CREATING A CONTRACT BASED REGIONAL DEPLOYMENT AUTHORITY FOR OAKLAND COUNTY

Oakland County's knowledge-based economy continues to lead in the research and development of technologies essential to the invention and manufacture of the next generation of automobiles. Currently more than 70 percent of the world's automotive research occurs in Michigan. With 75 of the top 100 global automotive suppliers in Oakland County it is estimated that nearly one-half of all global automotive research is happening within our borders. The world's automotive market is thriving here. Research and development from companies as old as General Motors and as new as Arada Systems and Google are all hitting their stride and taking ideas from vision to showroom. Our history and strength in developing and sustaining automotive technology,

however, is not outpacing the newcomers to this important market. In places as near as California and as far as South Korea, efforts are underway to be the next hub of automotive creativity. Oakland County and the state of Michigan must continue to lead, not only in the creation of technology but also in the environment that allows the inventors, engineers and risk takers to thrive.

The future automobile will fill itself with code, devices and software offering opportunities beyond our current imagination; to pilot instead of drive, to communicate to its surroundings, to prevent all types of injuries, and to source data for applications in parking, traffic and more. The internet of things will be imbedded in the infrastructure of the vehicle and the automobile will be a source of mobility far beyond basic transportation. Individual ownership will begin to give way to autonomous fleets, ride sharing and urban pods. The place that offers this new economy an environment where it can quickly grow and thrive will capture not only a changing industry but also its talent, its ideas, and the significant economic impact it brings. Often a business environment is spoken of in terms of tax policy, but in this case the focus must be on infrastructure. There must be an actionable effort to build the environment where the county's economy can be first to test, first to produce and first to deploy.

As new ideas become deployable technology, Oakland County is at a cross road of success and peril. Despite being home to the leading companies in connected and autonomous technology, we have seen significant infrastructure investment placed outside our borders. In recent years, government agencies, universities and market developers have launched ambitious and significant initiatives. Each aggressive step forward helps create success in driving connected and autonomous mobility. The Michigan Department of Transportation (MDOT), in partnership with USDOT and the University of Michigan, has opened M-City under the watchful excellence of the University of Michigan Transportation Research Institute. This elite research-based testing environment is now fully booked with the world's leading automotive manufacturers. MDOT has diligently deployed long haul trucking management systems in West Michigan. There are roadside signal units on major freeways in Southeast Michigan allowing extended test environments in a live application and there is now being constructed at the Willow Run Air facility a validation center of excellence called the American Center for Mobility. These efforts do not even begin to balance against the hundreds of companies creating and testing vehicle-to-vehicle communication and safety technologies in onsite labs and test tracks.

By all accounts, Oakland County is at the forefront of connected and autonomous research and development. The key is understanding how we stay there as there remains an element of peril in all that is happening around us. There is peril in resting on our laurels, peril in simply taking a break or waiting for industry to drive the next step. If Oakland County is to sustain its position as a leader in connected technology and benefit from the jobs and economy that drives it, the county must take an active leadership role in building the foundation of how we implement a network upon which the technology can thrive.

This proposal seeks collaboration between Oakland County, the Road Commission for Oakland County, the Michigan Department of Transportation, and several advanced automotive manufacturing and technology companies to create a pilot program to guide and develop the working plan and potential decision-making body for the live deployment of connected and autonomous infrastructure. As the rest of the world grows larger in our rearview mirror, there stands an opportunity to begin converting test and validation to deployment and in so doing creating the first multi-variable live environment for companies to bring forth this technology.

To reach this next important step in the race to capture the identity and economy of this important industry there must come together dozens of moving parts, not in the mechanical sense, but in the multitude of jurisdictions, models, needs and ideas. To weave all of those compatible yet varied interests together into a working solution, there must be a guiding entity where the roll and voice of each interest is heard, protected and vetted. Without such an entity, private companies will grow this technology around the interests of right-of-way, safety and in an altogether haphazardly fashion. We cannot simply cede control of the assets and wait for the best product to arrive.

A pilot authority, calling together interested parties into a collaborative working entity, with specific rolls and protections, dates of sunset, and means of vetting and partnering technology, provides the best opportunity to model what will be necessary to deploy an integrated system for connected mobility and replicate that deployment in the prosperity regions of Michigan.

The Case for an Authority

The basis of deploying an integrated system of connectivity is two-fold: (1) protecting public safety through multiple integrations of technology and (2) promoting economic development and sustainability through coordinated leadership. These two factors, safety and economic sustainability, are the horsepower behind autonomous and connected infrastructure deployment and the basis of any business model seeking to capitalize and maintain a system. The race to capture the focus of this technological explosion, and its significant public benefits, has long ago started, however much of the world is still approaching the start line hoping to be first to cross but not knowing how. The region that can capture where these technologies are developed, enhanced and, most importantly, deployed will define both the start and finish line for the next economic development tsunami. Understanding what the start and finish line looks like is complex and brings out the enormity of the task at hand.

In other parts of the world governments are working diligently to begin deployment of what they believe is the connected world of the future. A Cooperative ITS deployment is being funded by a collaboration of Germany, Austria and the Netherlands to create a corridor with the ability to implement early warning systems and use vehicle probe data to enhance safety. This WAVE based deployment, while grand in scope, is reflective of only a few out of dozens of potential ITS infrastructure options.

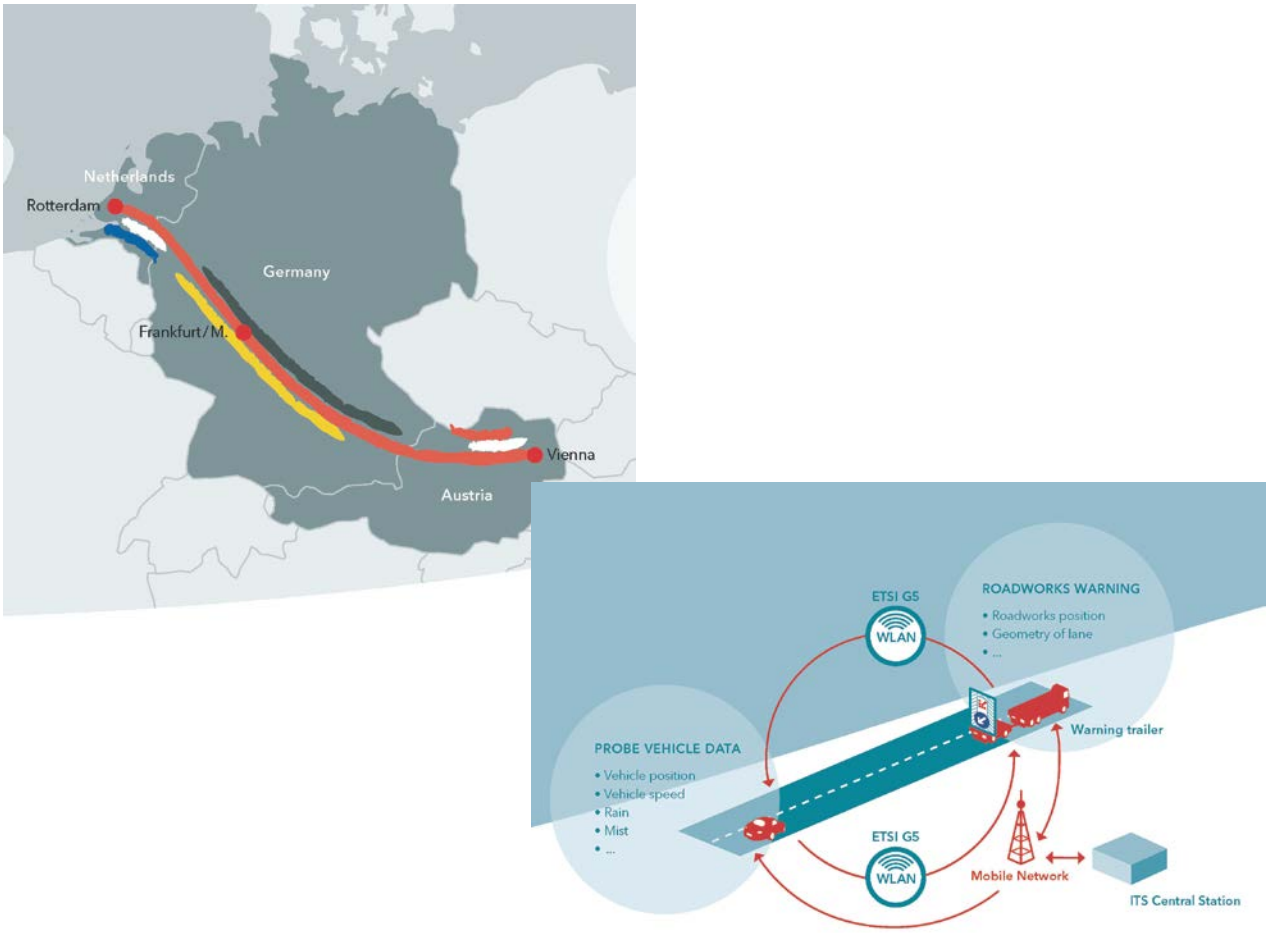

SOURCE: BMVI - Cooperative ITS Corridor Joint Deployment brochure | www.bmvi.de

In this instance Austrian ITS officials have the responsibility to seek bids on the build out of the infrastructure. A basic design/build model, funded through traditional government based budgeting. In a way, this example is similar to the many RSU units currently in operation under the direction and watch of MDOT throughout Michigan. Corridors of vehicle to infrastructure wireless test units installed and funded through traditional government budget or grant dollars. The buildout of expressway corridors is certainly part of a future system, but when you look at what percentage of roadway these corridors actually comprise it becomes clear that full

deployment of this technology must include a broad array of additional technologies and hundreds of miles of traveled roadway with a business model that brings capital from non-traditional budgetary sources. Indeed it does.

Instead of looking at how to build a system piece by piece, it is instructive to begin to view the collective of technologies that are already ready for implementation and in so doing begin to understand how an authority becomes practical, if not necessary. Some of the basic ready applications include C-ITS;

C-ITS system helps to prevent car accidents and to improve traffic efficiency by exchanging real-time vehicle data between cars and infrastructures

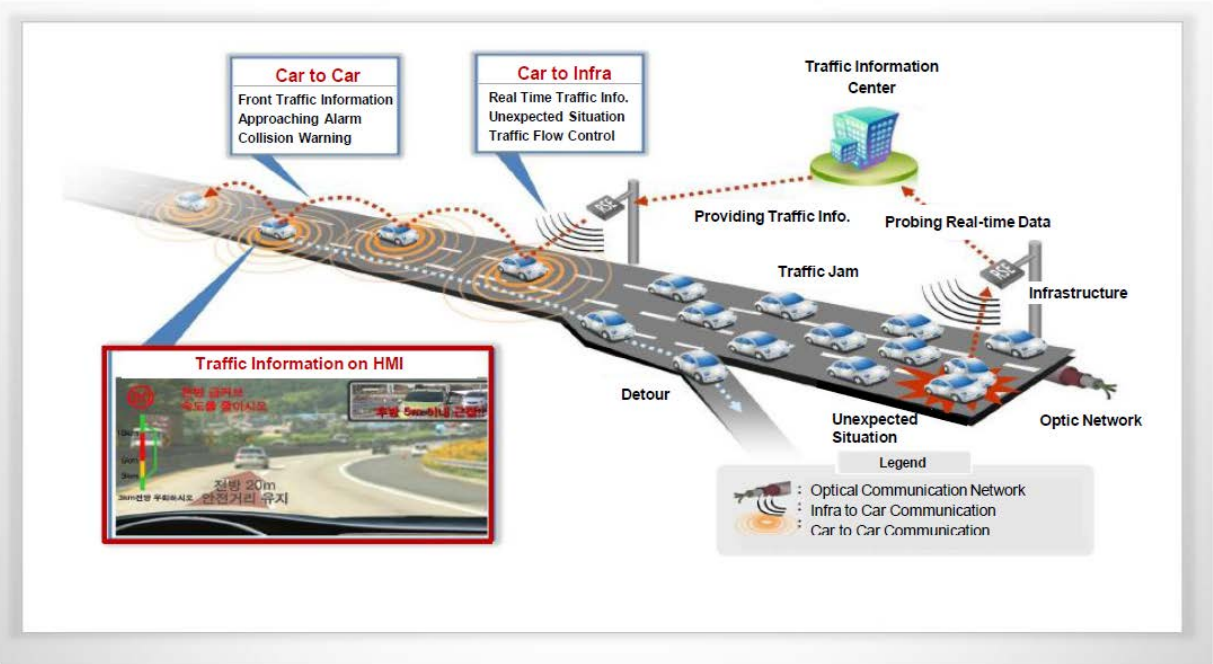

As we examine the impact of the service elements enhanced by C-ITS the amount and scope of how many agencies and entities affected pushes the notion and need for a governing body to coordinate and focus the management and benefit;

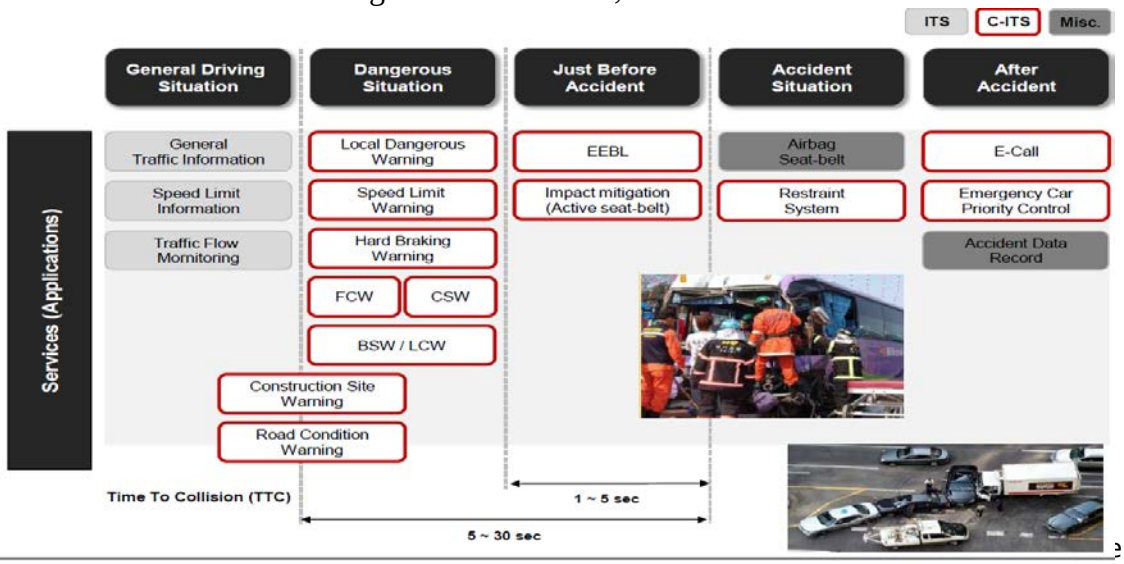

Just the elements of warning and post-accident response bring forth partners ranging from local road commisions, to utililties, to emergency personel, all with differing data needs and access to infrastructure.

When the system is then layered with C-ITS OBU after-market products, wireless access in vehicular environment (WAVE), automatic event detection systems, multi-lane detection/tolling systems, school zone warnings, construction warning, etc., the amount of oversight, expense and management becomes large. An authority of interested partners allows a planned build out of these important technologies.

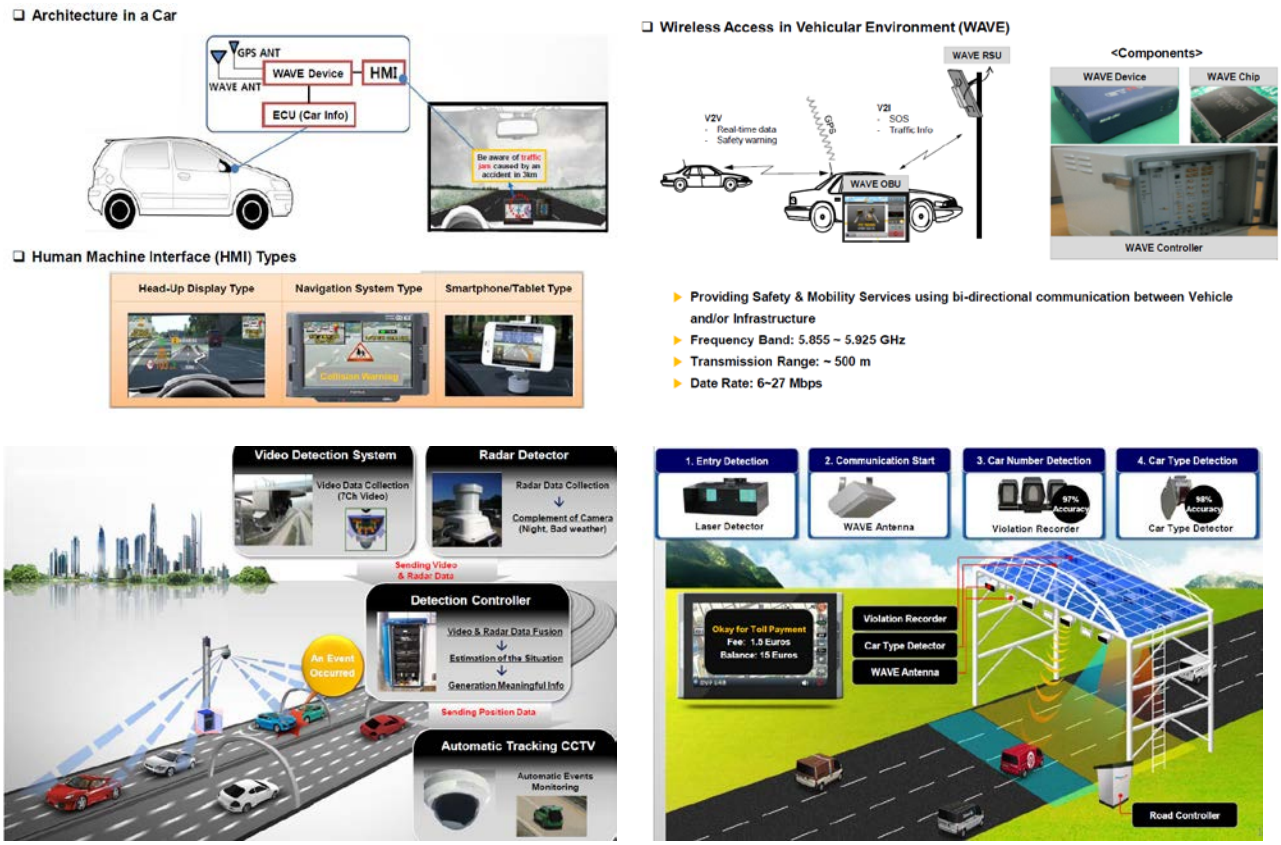

This is only the beginning. An examination of companies within Michigan, and particularly Oakland County, reveals that hundreds of technologies are being developed and commercialized that will push the needs of connected infrastructure even farther: the use of wireless parking applications to manage meters and deck inventory; software updating via wireless push notification; enhanced mapping and location services. As these technologies grow, so to does the private sector advancements in telecom wireless, 5G, and many other opportunities that would

work to render the preservation of jurisdiction over rights-of-way in the interests of public safety somewhat meaningless.

As individiual jurisdictions, whether municipal or agency, plan for their particular role and interests in this advancing market, concern begins to arise as to how individual responsibilities can be managed in coordination with multiple applications. As an example, if RCOC is overseeing intersection permitting, who is vetting and coordinating emergency vehicle detection and notification data backhaul?

A true plan for deployment would take into account the status and timing of several basic elements:

Probing Basic Data

- Probing location based vehicle data
- Providing location based trafic information
- Tolling or detection systems using WAVE protocal

Safety Driving Support

- Dangerous location warning
- Road condition and weather information
- Construction site warnings

Intersection safety support

- Intersection traffic sign violations
- Right turn warning

Public Safety Support

- Bus operation management
- Providing yellow bus operation information

VRU Safety Support

- School Zone and other warnings
- Pedestrian collision avoidance

Inter-Vehicle Safety

- Forward collision warning
- Emergency vehicle approaching warning
- Emergency situation warnings

No single agency or government entity has either control or scale to coordinate and manage these basic functions of deployment, yet alone the rush of vehicle data probing in the private sector product development.

There are two fundamentals in all of this an accelerating need and an opportunity to beat the rest of the nation where it counts; economic development and sustainability. As layers of technology expand the map of what a connected infrastructure looks like, there concurrently exists the opportunity to capture the corporate growth that is following. Even an economic devleopment organization as strong as Oakland County Economic Development and Community Affairs cannot single handedly drive the attraction and expansion of the research happening at UMTRI, or the validation that will occur at the future Willow Run site. There must be a coordination of effort that includes a direction for how regional partners can cooperate to implement the research and deploy an environment where the technology can be tested, used, sold and replicated.

Several Tier 1 automotive companies have proposed a plan for the installation of various types of data units in and around north central Oakland County. The plan would allow for these companies and others to test their efforts in a live setting. Should such a plan be implemented it would allow many of the world's leading companies in advanced mobility to bring their testing vehicles and engineering talent back from other states. If such a proposal becomes reality, which is strongly suggested here, there is at a minimum three governmental jurisdictions invovled in road and interesection control, liability and oversight. The companies involved in the proposed variable live deployment alone also represent more than a dozen separate and distinct data and infrastructure needs. The scope of this project would immediately attract Michigan-based companies in insurance and health-based product development. If one looks closely at the complete environment as charactured by Korea ITS in Appendix ___ the scope of the need for a collaborative authority becomes clear.

All of this begs the need for an authority to coordinate the various interests, as there is likely no single agency either willing or budgeted to take on this task alone.

Outline of a Proposed Authority

An intergovermental Agreement

To preserve and protect the interests of MDOT, RCOC, Oakland County, and cities with independent ROW, an agreement defining the role and responsibility of each entity is required. This is an oportunity to begin to define which agency in a particular region would have what responsbility. It would define how to manage infrastructure development planning to account for expansion. How to manage data sharing, future maintenance and upgrade, and coordinating permitting and construction.

A Cooperative Alliance

With an agreement in place defining and protecting the roles of each government based partner, the authority would then look to bring in private entities to assist in the coordination of applicable technologies. To avoid the pitfalls of "hanging devices on poles," partners should be selected on the basis of their ability to:

- Promote the convergence of DSRC deployment in vehicles with a new generation of standardized telematics applications (e.g UBI or usage-based insurance) running on consumer devices, preferably using an open B2C platform with maximum flexibility for both TSPs (telematics service providers) and consumers to transact business.

- Realize the potential of a third party asset management system to construct and maintain non-safety related micro-cell and other infrastructure as a back end revenue source of sustainability.

- Ensure strict adherance to regulatory guidelines and specifications from recognized DSRC stakeholder organizations (e.g. USDOT, SAE, AASHTO), by new V2V safety and V2I mobility management applications being developed and offered for deployment on our network.

- Understand and facilitate the role of RSU infrastructure inter-operating with traffic management, traffic signal prioritization for emergency fleets, advanced traveler information systems (e.g. new generation of public 511-like services), non-satelite geo-positioning and non-DSRC nomadic devices (e,g, smartphones), and how these elements of vehicle safety can coorindate with data backhaul and notice systems important to roadway management and emergency fleets.

- Develop SAE based training programs to coordinate with workforce development such that technician devleopment becomes a pillar of this industry capture.

A Coordinated Strategy

The opportunity to create the foundation of a variable live deployed environment is an important one. There is an opportunity to refine a strategy on many fronts:

- Partnering private capital and equity to support deployment and sustainability.
- Modeling consumer-based user adapability and the business effects of demand.
- Offsetting incentive-based economic attraction models with coordinated live deployment.
- Creating a economic partnership among key entities, i.e. UMTRI, EDCA, Spark, etc.

There is an opportunity to create a governing authority to answer all the details outlined above. But even more the entities involved in such an effort can define how deployment of this technology will expand from the proposed variable live deployment in Auburn Hills, to all of Oakland County, to all of Regional Prosperity Zone 10 and to all prosperity regions in Michigan. A road map for regional depolyment, rule making and oversight.

The Task Force recommends that Oakland County, MDOT and RCOC enter an intergovernmental agreement forming a non-taxing authority for the coordination and modeling of infrastructure needs for connected and autonomous vehicles. Each party shall define its conditional participation in such an entity and pledge resources to the authority allowing the entity and key private sector partners, the opportunity to set the procedure, scope and business plan for deployment of future systems that expands and replicates the parameters set by the authority. A proposed agreement is shown in the Appendix.

3. RELEASE AN RFP SEEKING PROPOSALS TO FURTHER THE OBJECTIVES OF THIS REPORT AND DEPLOY A PILOT NETWORK

The United States Department of Transportation (USDOT) has been working on DSRC and connected infrastructure deployment for decades. The significant research that has accelerated that work in recent years has pushed the question of: “How do we take this innovative technology from testing to use?” In each of the USDOT Pilot Test Beds the purpose of the deployment and the data being sought is principally to advance the validation and safety of the technology. In those use cases there has not been an answer to the real question, “How do we start?”

As recent as July 2017 the OCCV Task Force has focused the opportunity to bring deployment of a DSRC Network in manner that woud allow the group to prove the concepts of controlled spectrum sharing in a live environment. The thought is that if we could install DSRC equipment that is embedded with software that works to reveal the process of channel selection we can validate the equity opportunity of a controlled spectrum sharing policy. Even as this report was

being prepared the Task Force pulled together estimated budget numbers to include in a potential RFP. This effort revealed a conflict between the eagerness to adopt a potential solution against the need to maintain an open and neutral position in seeking requests for proposal.

Regardless of the conflict, the Task Force has outlined language costs for a potential budget request:

> "Acceptance of proposals would support a pilot deployment of the technology described in this report as well as set the foundation for a long term strageic plan for regional deployment. Estimated budget allocation for acceptance of proposals is as follows:
>
> **Assumptions:**
> - RSU only with no integration into controller
> - Dedicated backhaul for communications
> - No black box or other local processing device
> - Costs are for hardware and not installation
>
> **Components for BASIC system:**
> - RSU (including PoE Injector) $3,000-$5,000
> - Cell Modem (for backhaul) $1,000
> - Cell Service (for backhaul) $100/month for unlimited data
> - Cable, mounting, misc. hardware $1500
> - Switch/Router (optional) $2,000
>
> **Labor Costs**
> - The install cost is $270/hr and will require 5-hours per site
>
> **Training Design**
> - Program set up and design $2,500
> - Production $3,500
> - Set up channel and access $4,000
>
> **Technical Support**
> - One year of technical support $3,000/month

The Task Force has worked to define how a pilot solution may work in showcasing controlled spectrum sharing:

- Create a small test bed based on available budget including RSU's and OBU's and wireless backhaul for some limited period of time
    - Use wireless backhaul for simplicity of the installation

- Include software that will require a password to initially access the network (via the OBU)
    - This is what the current Lear RSU/OBU configuration includes

- Be able to validate that we can identify the mobile device being given access to the service channel

- Be able to quantify the amount of bandwidth that each mobile device is consuming

While these efforts are important to understanding the potential solutions to the issue of revenue and monetization of a DSRC network, any RFP that seeks to bring forward a proposal leading to the implementation of a DSRC network must be neutral to technology and methodology. If Oakland County issues an RFP asking for specific equipment and technology it is NOT an RFP seeking a solution from one or more providers, it is essentially a purchase order. Such a process risks exclusion of potential respondants due to conflict with the concepts outlined in this report.

To facilitate a potential solution, the Task Force recommends that Oakland County issue an RFP based on the open language outlined below.

The following is a proposed introductory background to an RFP:

The Oakland County Connected Vehicle Task (OCCV) Task Force was created in 2014 with a mandate to develop a plan for Oakland County to become a nationwide leader in the adoption of DSRC technology. At the outset, the Task Force identified two principal impediments to the growth of a national market for DSRC technology:

- *inadequate funding for infrastructure (V2I) deployment and operations*
- *lack of compelling consumer value proposition for aftermarket adoption (ASD - aftermarket safety device or RSD – retrofit safety device)*

As such, the work of the Task Force was directed towards the search for policies which, in collaboration with the Michigan Department of Transportation (MDOT) and the Road Commission of Oakland County (RCOC), can be adopted to create a local regulatory environment in which DSRC technology suppliers are encouraged to provide innovative methods

for commercially viable DSRC infrastructure deployment and operations. To this end, Oakland County and its constituent municipalities, is entering into an agreement with MDOT and RCOC to enable the creation of a DSRC Infrastructure Authority ("enabling agreement") responsible for the elaboration of and execution of the aforementioned policies.

The following terms outline the points necessary to be included in a request for proposals from qualified suppliers and system providers and consist of DSRC-based technologies to further these objectives.

Constraints

Adherence to Regulatory Requirements and USDOT Guidelines

Any proposal must be fully compliant with the provisions of Federal Motor Vehicle Safety Standard (FMVSS) 150 ("V2V"), including the Security Credential and Management System (SCMS) as defined within the scope of the V2V regulation. FMVSS 150 subsumes all relevant IEEE and SAE specifications for DSRC OBUs (On-board units) and RSUs (Roadside Units).

Compliance with the SCMS includes, but is not limited to, a root Certificate Authority (root CA), an automated process for provisioning of OBUs with security credentials, the means to respond to requests from OBUs for replenishment of security credentials (Registration Authority) and the means to communicate Certificate Revocation Lists (CRL) to OBUs.

Proposals must also comply with USDOT (FHWA) guidelines governing configuration and operation of RSUs, and must adhere to all SAE and IEEE recommendations regarding the implementation of DSRC applications which are beyond the scope of the V2V regulation itself. Such adherence must ensure that any new DSRC application proposed must be compatible with the architecture of, and standardization practices inherent in, both WAVE (Wireless Access Vehicular Environment) and the SCMS, including but not limited to, the specification of Provider Service Identifiers (PSID) for each application, of Service Specific Permissions (SSP) for SCMS certificates associated with each application and of the application priority as defined by IEEE 1609.4 with respect to channel management.

Consumer Value Proposition

Respondents shall propose mechanisms, which can be implemented using existing ASD or RSD hardware, and which enable the Infrastructure Authority to offer a suite of services to consumers where the value proposition is sufficiently attractive to encourage the purchase and installation of aftermarket OBUs. The successful proposal shall preferably incorporate an online system for delivery of services in a manner that allows for a

simplified method of collection of fees from service subscribers. For each of the proposed services, respondents should also recommend reasonable fee structures and should specify what they regard as an equitable percentage of the resulting service revenues to remit to the Infrastructure Authority.

Respondents should also specify whether delivery of services is dependent on interaction with external systems operated by any of the signatories of the enabling agreement for the Infrastructure Authority (e.g. MDOT, RCOC) and for each such system, outline a specification for the Application Programmer Interface (API) required to communicate with it.

Use of DSRC Service Channels

Respondents shall ensure that any new proposed applications using DSRC Service Channels shall be entirely subordinated to the priorities of traffic management, roadside alerts and other road management or safety-related DSRC applications which may be independently deployed by RCOC or MDOT. As such, the successful proposal must include a detailed explanation of the mechanisms used to avoid situations in which the bandwidth consumed by new proposed applications impedes the effective operation of independent road management or safety-related DSRC applications.

It is anticpated that respondants may propose solutions to parts of the RFP, or join together in collaboratives to submit a holisitic approach to the response. An example of a potential singular response is in the area of workforce development. It is recommended, therefore, that any RFP include requests beyond the DSRC standards in an attempt to receive proposals outlining how training would be a component of technician training and service of a deployed network.

Respondents shall propose development of a range of courses with advanced topics specific to the Oakland County Task Force Recommendations and Pilot Project. These courses should focus specifically on intelligent transportation and DSRC based applications. The courses should provide comprehensive leadership related topics, business models, as well as technical level training around V2I concepts, onboard units, architecture and infrastructure. The courses should be delivered though an online learning channel called the Oakland County Connected Vehicle Channel.

4. ALLOCATE BUDGET SUPPORTING RFP ACCEPTANCE AND PILOT DEPLOYMENT

There exists a conflict in the approach to budget allocation.

First, if it is the decision of the county to issue a neutral RFP, seeking a broad response of varied concepts but based soundly on the core standards of DSRC network deployment, there cannot at this time be an itemized budget. Any response to RFP would set forth the method and technology intended to support the concept of a DSRC network that has the potential for monetization.

> As an example, an RFP could issue on the standards based terms outlined above, with an intention that the RFP would be support at a cost "up to" a certain amount, subject to acceptance of a submitted proposal and reassessment and acceptance of budget allocations as any such proposal is outlined.

Second, if the county decides that it is a better direction to select the type of technology solution that would more quickly prove the basis of a controlled spectrum sharing policy then it is feasible for an RFP to be supported by an anticipated budget allocation.

> As an example, an RFP could allocate the assumptions and equipment descriptions outlined above and set an estimtaed cost for each. That would allow the county to set forth how many of something it wanted, e.g. intersection deployment.

It is the recommendation of the Task Force to adopt the first option, allowing any entity eligibility to respond and a discretionary approach to RFP acceptance.

CONCLUSION AND SUMMARY OF RECOMMENDATIONS

The Task Force strongly believes that Oakland County can be the leader in this technology and its impact. This report is intended to be a preliminary outline of the concepts of connected vehicle technology and the possible use cases that may be derived to implement the innovation into the future sustainability of Oakland County.

The most important aspect of the Task Force findings is the necessary understanding that to preserve safety messaging in a public transportation system, infrastructure authorities must control the DSRC network and operate it in a manner that allows for controlled spectrum sharing. The recommendations in this report are intended to move Oakland County forward towards that solution through a neutral and compliant process of intergovernmental agreement and procurement of proposals through County based RFP requirements.

To facilitate the next steps of action in accord with the Task force findings, it is recommended Oakland County adopt the following recommendation:

1. CONDUCT A TECHNICAL DEMONSTRATION AT THE 2017 ITS WORLD CONGRESS IN MONTREAL.

   Policy decision – Use of general fund busget to reimburse task force member cost of attendance at event.

2. SECURE EXECUTION OF INTERGOVERNMENTAL AGREEMENTS AND SUB-PARTICIPATION AGREEMENTS CREATING A CONTRACT BASED REGIONAL DEPLOYMENT AUTHORITY FOR OAKLAND COUNTY.

3. RELEASE AN RFP SEEKING PROPOSALS TO FURTHER THE OBJECTIVES OF THIS REPORT AND DEPLOY A PILOT NETWORK

   Policy Decision – Choice of neutral or specific technology request

4. ALLOCATE BUDGET SUPPORTING RFP ACCEPTANCE AND PILOT DEPLOYMENT

The appendix attached hereto are a small reflection of the type of work that has gone into the modeling of the concepts and recommendations of the Task Force.

APPENDIX

PROPOSED INTERGOVERNMENTAL AGREEMENTS

INTERGOVERNMENTAL AGREEMENT
BETWEEN AND AMONG
OAKLAND COUNTY,
THE MICHIGAN DEPARTMENT OF TRANSPORTATION, AND
THE ROAD COMMISSION FOR OAKLAND COUNTY
FOR PLANNING A CONNECTED VEHICLE DEPLOYMENT

This Agreement (the "Agreement") is made between Oakland County 1200 North Telegraph Road, Pontiac, Michigan 48341 ("County"), the Michigan Department of Transportation 18101 W. Nine Mile Rd., Southfield, MI 48075 ("MDOT") and the Road Commission for Oakland County, 31001 Lahser Road, Beverly Hills, Michigan, 48025 ("RCOC"). County, MDOT, RCOC may be referred to jointly as "Parties".

PURPOSE OF AGREEMENT. The Parties enter into this Agreement for the purpose of planning connected autonomous vehicle ("CAV") deployment in Oakland County, Michigan. This deployment requires the Parties to address numerous issues such as infrastructure development, legal, security, technical and public acceptance concerns. This Agreement will establish the role of each Party in the planning, implementation and CAV deployment process.

BACKGROUND. Connected driving is a term for the technology which allows vehicles to be connected to each other, and to the infrastructure and transportation network. Through the use of technology, the transportation system will increasingly be able to share information to improve decision making. Car sensors and technology in the transportation network can enhance what drivers see around them to improve road safety, reduce congestion and improve traffic flows. There are several efforts under way in the United States, Japan and Europe to deploy this technology. As the birthplace of the automobile industry, and home of major automobile manufacturers and suppliers, Michigan is an ideal location to lead the way in connected driving. With the planned expansion of Interstate-75 the perfect opportunity exists for the Parties to successfully plan and implement a CV deployment model.

In consideration of the mutual promises, obligations, representations, and assurances in this Agreement, the Parties agree to the following:

1. **DEFINITIONS**. The following words and expressions used throughout this Agreement, whether used in the singular or plural, shall be defined, read, and interpreted as follows.

    1.1. **Agreement** means the terms and conditions of this Agreement and any other mutually agreed to written and executed modification, amendment, Exhibit and attachment.

    1.2. **Claims** mean any alleged losses, claims, complaints, demands for relief or damages, lawsuits, causes of action, proceedings, judgments, deficiencies, liabilities, penalties, litigation, costs, and expenses, including, but not limited to, reimbursement for reasonable attorney fees, witness fees, court costs, investigation expenses, litigation expenses, amounts paid in settlement, and/or other amounts or liabilities of any kind which are incurred by or asserted against one or all of the Parties.

1.3. **County** means Oakland County, a Michigan Municipal Corporation, any and all of its departments, divisions, elected and appointed officials, directors, board members, council members, commissioners, authorities, committees, employees, agents, volunteers, and/or any such persons' successors.

1.4. **Countywide, Within Oakland** means taking place within the physical boundaries of Oakland County, Michigan.

1.5. **Day** means any calendar day beginning at 12:00 a.m. and ending at 11:59 p.m.

1.6. **Michigan Department of Transportation (MDOT)** means any and all of its departments, its divisions, elected and appointed officials, directors, board members, council members, commissioners, authorities, committees, employees, agents, subcontractors, attorneys, volunteers, and/or any such persons' successors.

1.7. **Participating Public Body (PPB)** means a city, village or township Within Oakland that will support the planning and deployment activities of the Parties as specified in the model PPB Agreement provided in Exhibit II.

1.8. **Road Commission for Oakland County (RCOC)** means any and all of its departments, its divisions, elected and appointed officials, directors, board members, council members, commissioners, authorities, committees, employees, agents, subcontractors, attorneys, volunteers, and/or any such persons' successors.

1.9. **Exhibits** mean the following which are attached and incorporated to this Agreement or added at a later date by a formal amendment to this Agreement:

Exhibit I: Parties Objectives for 2017

Exhibit II: PPB Model Agreement

2. **RESPONSIBILITIES.** The parties agree that the principal purpose of this agreement is to formulate use cases whereupon the technical details of a local/regional plan for CAV deployment may be developed and implemented. Any such use case(s) are intended to define specifications for CAV deployment and as such, the parties shall reasonably cooperate in the prioritization of activity, the sharing of data and resources, and the coordination of any pilot or live deployment(s). It is acknowledged that the allocation of many responsibilities, both under this agreement and to be contained within any plan for CAV deployment, can only be established through affecting the initial use case and/or pilot deployment. Examples of responsibilities requiring development include but are not limited too;

- Which party shall be responsible for the FCC licensing of 5.9 GHz DSRC units on public right-of-ways within Oakland.
- Which party shall be responsible for the design, deployment, maintenance and operation of a CAV infrastructure within Oakland.
- If maintenance and operation of a CAV infrastructure, deployed network, or general activity is conferred to a non-party entity, which party hereunder shall manage and be responsible for such occurrence.
- Which party shall be responsible for coordinating a Qualified Products List for CAV infrastructure components to ensure interoperability within Oakland.

The parties recognize that certain activities under the terms and intent of this agreement, beyond those to be defined in the strategic planning process, do require the allocation of basic duties and responsibilities at the commencement of activity under this contract, therefore;

2.1. **COUNTY RESPONSIBILITIES**. County shall:

2.1.1. Provide one or more individuals to participate in the planning, meetings and discussions of the Parties concerning CAV deployment.

2.1.2. Through its Department of Economic Development and Community Affairs, work directly with businesses wishing to expand CAV deployment Within Oakland and assist in finding private sector opportunities to fund the deployment.

2.1.3. Act as the facilitating agent for coordination of local government and non-party cooperation and participation in the use cases developed hereunder.

2.1.4. Provide technical opportunities and business solutions for potential revenue generation.

2.2. **MDOT RESPONSIBILITIES**. MDOT shall:

2.2.1. Assist in the coordination of all physical deployment activities, and provide technical assistance to the County, RCOC and/or participating public partners, where applicable.

2.2.2. Assist the County, RCOC and/or participating public partners, in the development of specifications and requirements for all CAV infrastructure components, channel allocations and security credentials that are applicable to a local and/or regional deployment plan or use case.

2.2.3. Assist the County, RCOC and/or participating public partners, in establishing a plan, or specification, for the management of data deriving from CAV deployments effected by the parties under this agreement. Such plan shall include a basis for data access and the management thereof.

2.2.4. Assist in managing the initial data collected as a result of equipment deployed to test or validate use case scenarios effected by the parties. Such data management may be handled through the DUAP system, if applicable, or other process established by MDOT. MDOT shall assist the County, RCOC and/or participating public partners in the use, interpretation or applicability of initial data to the establishment of specifications or requirements of a CAV deployment.

2.2.5. Provide one or more individuals to participate in the planning, meetings and discussions of the Parties concerning CAV deployment.

2.3. **RCOC RESPONSIBILITIES**. The RCOC shall:

2.3.1. Review and provide input to any deployment plans and specifications as may be developed or authorized by MDOT for deployment within Oakland.

2.3.2. Be responsible for developing a County-wide plan for the deployment of CAV infrastructure that integrates with MDOT speciifcations, as such will provide for a uniform, prioritized and focused deployment strategy.

2.3.3. Provide technical support to municipalities within Oakland to ensure their deployments meet the requirements and needs of the County-wide plan.

2.3.4. Provide one or more individuals to participate in the meetings and discussions of the Parties concerning CAV deployment.

3. **EXECUTION AND DURATION OF INTERLOCAL AGREEMENT.**

3.1. This Agreement and any amendments to it shall be effective when executed by all Parties. If necessary, a party may support execution of this agreement, or any amendment to it, by resolution from the governing body of said party, in such event, an executed copy of this Agreement and any amendments shall be filed by the Oakland County Clerk with the Secretary of State.

3.2. Unless extended by an Amendment, this Agreement shall remain in effect for three (3) years from the date the Agreement is completely executed by all Parties or until cancelled or terminated by any of the Parties pursuant to the terms of the Agreement.

4. **PARTICIPATING PUBLIC BODY (PPB) AGREEMENT.**

4.1. Upon the agreement of the Parties, one or more PPBs may work cooperatively with the Parties on CAV planning and deployment subject to the terms of the PPB Agreement provided for in Exhibit II.

4.2. The Director of MDOT, the Director of RCOC and the Chairman of the Oakland County Board of Commissioners, are authorized by their respective bodies to sign PPB Agreements on their behalf. The Parties shall provide an annual report to their respective governing bodies with the names of the PPBs that executed a PPB Agreement during the preceding twelve month period.

5. **ASSURANCES.**

5.1. Each Party shall be responsible for any Claims made against that Party by a third party, and for the acts of its employees, elected officials and agents arising under or related to this Agreement.

5.2. In any Claim that may arise from the performance of this Agreement, each Party shall seek its own legal representation and bear the costs associated with such representation, including judgments and attorney fees.

5.3. Except as otherwise provided for in this Agreement, neither Party shall have any right under this Agreement or under any other legal principle to be indemnified or reimbursed by the other Party or any of its agents in connection with any Claim.

5.4. This Agreement does not, and is not intended to, impair, divest, delegate or contravene any constitutional, statutory, and/or other legal right, privilege, power, obligation, duty, or immunity of the Parties. Nothing in this Agreement shall be construed as a waiver of governmental immunity for either Party.

5.5. The Parties have taken all actions and secured all approvals necessary to authorize and complete this Agreement. The persons signing this Agreement on behalf of each Party have legal authority to sign this Agreement and bind the Parties to the terms and conditions contained herein.

5.6. Each Party shall comply with all federal, state, and local ordinances, regulations, administrative rules, and requirements applicable to its activities performed under this Agreement.

5.7. Each Party shall be responsible for their own costs of participating in all meetings and discussions and compliance with any subpoena, Court Order, or Freedom of Information Request directed to it for public records concerning this Agreement.

6. **LIMITATION OF LIABILITY**. In no event shall any Party be liable to another Party or any other person, for any consequential, incidental, direct, indirect, special, and punitive or other damages arising out of this Agreement.

7. **DISPUTE RESOLUTION**. All disputes relating to the execution, interpretation, performance, or nonperformance of this Agreement involving or affecting the Parties should first be submitted to the Director of MDOT, The Director of the RCOC and the Deputy County Executive for Economic Development, who shall promptly meet and confer in an effort to resolve such dispute. If they cannot resolve the dispute in ten (10) business days, the dispute may be submitted to the signatories of this Agreement or their successors in office, who may confer in an effort to resolve such dispute.

8. **TERMINATION OR CANCELLATION OF AGREEMENT**.

8.1. Any Party may terminate or cancel this entire Agreement upon ninety (90) days written notice, if either Party decided, in its sole discretion, to terminate this Agreement, for any reason including convenience.

8.2. The effective date of termination and/or cancellation shall be clearly stated in the written notice. Either the County Executive or the Board of Commissioners is authorized to terminate this Agreement on behalf of County under this provision.

9. **DELEGATION OR ASSIGNMENT**. Neither Party shall delegate or assign any obligations or rights under this Agreement without the prior written consent of the other Party.

10. **NO EMPLOYEE-EMPLOYER RELATIONSHIP**. Nothing in this Agreement shall be construed as creating an employee-employer relationship between County and Public Body.

11. **NO THIRD PARTY BENEFICIARIES**. Except as provided for the benefit of the Parties, this Agreement does not and is not intended to create any obligation, duty, promise, contractual right or benefit, right to indemnification, right to subrogation, and/or any other right in favor of any other person or entity.

12. **NO IMPLIED WAIVER**. Absent a written waiver, no act, failure, or delay by a Party to pursue or enforce any rights or remedies under this Agreement shall constitute a waiver of those rights with regard to any existing or subsequent breach of this Agreement. No waiver of any term, condition, or provision of this Agreement, whether by conduct or otherwise shall be deemed or construed as a continuing waiver of any term, condition, or provision of

this Agreement. No waiver by either Party shall subsequently affect its right to require strict performance of this Agreement.

13. **SEVERABILITY**. If a court of competent jurisdiction finds a term or condition of this Agreement to be illegal or invalid, then the term or condition shall be deemed severed from this Agreement. All other terms, conditions, and provisions of this Agreement shall remain in full force.

14. **PRECEDENCE OF DOCUMENTS.** In the event of a conflict between the terms of and conditions of any of the documents that comprise this Agreement, the terms in the Agreement shall prevail and take precedence over any allegedly conflicting terms in the Exhibits or other documents that comprise this Agreement.

15. **CAPTIONS**. The section and subsection numbers, captions, and any index to such sections and subsections contained in this Agreement are intended for the convenience of the reader and are not intended to have any substantive meaning. The numbers, captions, and indexes shall not be interpreted or be considered as part of this Agreement. Any use of the singular or plural, any reference to gender, and any use of the nominative, objective or possessive case in this Agreement shall be deemed the appropriate plurality, gender or possession as the context requires.

16. **FORCE MAJEURE**. Notwithstanding any other term or provision of this Agreement, a Party shall not be liable to the other Parties for any failure of performance hereunder if such failure is due to any cause beyond the reasonable control of that Party and that Party cannot reasonably accommodate or mitigate the effects of any such cause. Such cause shall include, without limitation, acts of God, fire, explosion, vandalism, national emergencies, insurrections, riots, wars, strikes, lockouts, work stoppages, other labor difficulties, or any law, order, regulation, direction, action, or request of the United States government or of any other government. Reasonable notice shall be given to the affected Parties of any such event.

17. **NOTICES**. Notices given under this Agreement shall be in writing and shall be personally delivered, sent by express delivery service, certified mail, or first class U.S. mail postage prepaid, and addressed to the person listed below. Notice will be deemed given on the date when one of the following first occur: (i) the date of actual receipt; (ii) the next business day when notice is sent express delivery service or personal delivery; or (iii) three days after mailing first class or certified U.S. mail.

    17.1. If Notice is sent to County, it shall be addressed and sent to: County Executive, Oakland County, 1200 North Telegraph Road, Pontiac, Michigan, 48341, and to Chairperson of the Oakland County Board of Commissioners, 1200 North Telegraph Road, Pontiac, Michigan 48341.

    17.2. If Notice is sent to MDOT, it shall be addressed to: MDOT Director State Transportation Building 425 W. Ottawa St., P.O. Box 30050,Lansing, MI 48909

    17.3. If Notice is sent to RCOC it shall be addressed to: RCOC Managing Director, 31001 Lahser Road, Beverly Hills, Michigan, 48025.

    17.4. Any Party may change the individual to whom Notice is sent and/or the mailing address by notifying the other Parties in writing of the change.

18. **GOVERNING LAW/CONSENT TO JURISDICTION AND VENUE**. This Agreement shall be governed, interpreted, and enforced by the laws of the State of Michigan. Except as otherwise required by law or court rule, any action brought to enforce, interpret, or decide any Claim arising under or related to this Agreement shall be brought in the appropriate Michigan Courts, as dictated by the applicable jurisdiction and venue of the court.

19. **ENTIRE AGREEMENT**.

    19.1. This Agreement represents the entire agreement and understanding between the Parties regarding the specific services described in the attached Exhibits. With regard to those services, this Agreement supersedes all other oral or written agreements between the Parties.

    19.2. The language of this Agreement shall be construed as a whole according to its fair meaning, and not construed strictly for or against any Party.

IN WITNESS WHEREOF, _____ hereby acknowledges that he/she has been authorized to execute this Agreement on behalf of the Michigan Department of Transportation and hereby accepts and binds the Michigan Department of Transportation to the terms and conditions of this Agreement.

EXECUTED:_____ DATE:_____

WITNESSED:_____ DATE:_____

IN WITNESS WHEREOF, _____ hereby acknowledges that he/she has been authorized by a resolution of the Road Commission for Oakland County, a certified copy of which is attached, to execute this Agreement on behalf of the Road Commission for Oakland County and hereby accepts and binds the Road Commission for Oakland County to the terms and conditions of this Agreement.

EXECUTED:_____ DATE:_____

WITNESSED:_____ DATE:_____

IN WITNESS WHEREOF, Mr. L. Brooks Patterson, Oakland County Executive, hereby acknowledges that he has authority to execute this Agreement on behalf of Oakland County, and hereby accepts and binds Oakland County to the terms and conditions of this Agreement.

EXECUTED:_____ DATE: _____

L. Brooks Patterson
Oakland County Executive

WITNESSED: _____ DATE: _____

EXHIBIT I

2017 OBJECTIVES OF MDOT, RCOC AND COUNTY

FOR CV DESIGN AND DEPLOYMENT WITHIN OAKLAND COUNTY

The Parties agree that they will work together on the following objectives with the goal of completion by the end of 2017:

1. Create a Master Plan for CAV deployment including timelines and responsibilities of each Party. Such Master Plan to be developed through the design and validation of "use cases", examples of which would include, but not be limited to;

    a. Red Light Warning and Crash Avoidance.

    b. Congestion Management.

    c. DSRC Controlled Spectrum Sharing.

    d. Data Management and Monetization.

    e. Role and Responsibly of Local CVT's.

2. Determine if a separate legal entity should be established to administer this Agreement. This may be a commission, board or council as provided for in the Urban Cooperation Act of 1967, MCL 124.507(1) et. seq.

3. Determine which PPB's should be asked to participate in the first year planning activities of the Parties under a PPB Agreement and define the specific role of the PPB(s). Such invitation does not imply that any Party hereto shall be responsible for funding of any activity.

4. Establish standards for implementation of a CAV master plan, such standards to be included in a regional plan for deployment that may be replicated in other parts of Michigan.

5. Establish opportunities for Michigan businesses to provide insight and expertise in the development of the CAV Master Plan and standards for deployment, encouraging further development of existing and future technologies benefitting the plan and the economic sustainability of Michigan.

EXHIBIT II
PARTICIPATING PUBLIC BODY AGREEMENT

INTERGOVERNMENTAL AGREEMENT BETWEEN AND AMONG OAKLAND COUNTY, THE MICHIGAN DEPARTMENT OF TRANSPORTATION, THE ROAD COMMISSION FOR OAKLAND COUNTY AND PARTICIPATING PUBLIC BODY FOR CONNECTED VEHICLE DEPLOYMENT

This Agreement (the "Agreement") is made between Oakland County, 1200 North Telegraph Road, Pontiac, Michigan 48341 ("County"), the Michigan Department of Transportation [insert address] ("MDOT"), the Road Commission for Oakland County, 31001 Lahser Road, Beverly Hills, Michigan, 48025 ("RCOC") and [Insert name and address] "PPB"). County, MDOT, RCOC and PPB may be referred to jointly as "Parties".

PURPOSE OF AGREEMENT. The Parties enter into this Agreement for the purpose of mutual cooperation in connected vehicle ("CV") deployment in Oakland County, Michigan. MDOT, RCOC and County are working together to address numerous issues such as infrastructure development, legal, security, technical and public acceptance concerns. This Agreement will establish the role of the PPB in working with MDOT, RCOC and County on the implementation and CV deployment process.

1. **DEFINITIONS**. The following words and expressions used throughout this Agreement, whether used in the singular or plural, shall be defined, read, and interpreted as follows.

   1.1. **Agreement** means the terms and conditions of this PPB Agreement and any other mutually agreed to written and executed modification, amendment, Exhibit and attachment.

   1.2. **Claims** mean any alleged losses, claims, complaints, demands for relief or damages, lawsuits, causes of action, proceedings, judgments, deficiencies, liabilities, penalties, litigation, costs, and expenses, including, but not limited to, reimbursement for reasonable attorney fees, witness fees, court costs, investigation expenses, litigation expenses, amounts paid in settlement, and/or other amounts or liabilities of any kind which are incurred by or asserted against one or all of the Parties.

   1.3. **County** means Oakland County, a Michigan Municipal Corporation, any and all of its departments, divisions, elected and appointed officials, directors, board members, council members, commissioners, authorities, committees, employees, agents, volunteers, and/or any such persons' successors.

1.4. **County-wide, Within Oakland** means taking place within the physical boundaries of Oakland County, Michigan.

1.5. **Day** means any calendar day beginning at 12:00 a.m. and ending at 11:59 p.m.

1.6. **Michigan Department of Transportation (MDOT)** means any and all of its departments, its divisions, elected and appointed officials, directors, board members, council members, commissioners, authorities, committees, employees, agents, subcontractors, attorneys, volunteers, and/or any such persons' successors.

1.7. **Participating Public Body (PPB)** means the city, village or township identified on page one of this Agreement any and all of its departments, its divisions, elected and appointed officials, directors, board members, council members, commissioners, authorities, committees, employees, agents, subcontractors, attorneys, volunteers, and/or any such persons' successors.

1.8. **Road Commission of Oakland County (RCOC)** means any and all of its departments, its divisions, elected and appointed officials, directors, board members, council members, commissioners, authorities, committees, employees, agents, subcontractors, attorneys, volunteers, and/or any such persons' successors.

1.9. **Exhibits** mean the following which are attached and incorporated to this Agreement or added at a later date by a formal amendment to this Agreement:

Exhibit I: Specific role of the PPB.

2. **COUNTY RESPONSIBILITIES**. County shall:

2.1. Provide one or more individuals to participate in the planning, meetings and discussions of the Parties concerning CV deployment.

2.2. Through its Department of Economic Development and Community Affairs, work directly with businesses located within a PPB wishing to expand CV deployment and assist in finding private sector opportunities to fund the deployment.

3. **MDOT RESPONSIBILITIES**. MDOT shall:

3.1. Provide guidance for technical activities.

3.2. Provide technical guidance, where applicable, to PPB in CAV deployment within its boundaries.

3.3. Provide one or more individuals to participate in the planning, meetings and discussions of the Parties concerning CV deployment.

4. **RCOC RESPONSIBILITIES**. The RCOC shall:

4.1. Provide technical support to PPB to ensure their deployments meet the requirements and needs of the County-wide plan.

4.2. Provide one or more individuals to participate in the meetings and discussions of the Parties concerning CV deployment.

5. **PPB RESPONSIBLITIES** The PPB shall:

5.1. Follow and adopt all technical specifications established mutually by MDOT, RCOC and the County that are included in a CAV Master Plan for deployment, with specific adherence to MDOT specifications for State Trunkline Roads, and RCOC specifications for County Trunkline Roads.

5.2. Perform the additional responsibilities outlined in Exhibit I.

6. **EXECUTION AND DURATION OF INTERLOCAL AGREEMENT.**

6.1. The Director of MDOT, the Director of RCOC and the Deputy County Executive responsible for economic development, were authorized by their respective bodies to sign this PPB Agreement on their behalf.

6.2. This Agreement and any amendments to it shall be effective when executed by all Parties.

6.3. The PPB shall provide the Oakland County Clerk with a copy of the resolution passed by the governing body of the PPB approving this Agreement. An executed copy of this Agreement and any amendments shall be filed by the Oakland County Clerk with the Secretary of State.

6.4. Unless extended by an Amendment, this Agreement shall remain in effect for three (3) years from the date the Agreement is completely executed by all Parties or until cancelled or terminated by any of the Parties pursuant to the terms of the Agreement.

7. **ASSURANCES.**

7.1. Each Party shall be responsible for any Claims made against that Party by a third party, and for the acts of its employees, elected officials and agents arising under or related to this Agreement.

7.2. In any Claim that may arise from the performance of this Agreement, each Party shall seek its own legal representation and bear the costs associated with such representation, including judgments and attorney fees.

7.3. Except as otherwise provided for in this Agreement, neither Party shall have any right under this Agreement or under any other legal principle to be indemnified or reimbursed by the other Party or any of its agents in connection with any Claim.

7.4. This Agreement does not, and is not intended to, impair, divest, delegate or contravene any constitutional, statutory, and/or other legal right, privilege, power, obligation, duty, or immunity of the Parties. Nothing in this Agreement shall be construed as a waiver of governmental immunity for either Party.

7.5. The Parties have taken all actions and secured all approvals necessary to authorize and complete this Agreement. The persons signing this Agreement on behalf of each Party have legal authority to sign this Agreement and bind the Parties to the terms and conditions contained herein.

7.6. Each Party shall comply with all federal, state, and local ordinances, regulations, administrative rules, and requirements applicable to its activities performed under this Agreement.

7.7. Each Party shall be responsible for their own costs of participating in all meetings and discussions and compliance with any subpoena, Court Order or Freedom of Information Request directed to it for public records concerning this Agreement.

8. **LIMITATION OF LIABILITY**. In no event shall any Party be liable to another Party or any other person, for any consequential, incidental, direct, indirect, special, and punitive or other damages arising out of this Agreement.

9. **DISPUTE RESOLUTION**. All disputes relating to the execution, interpretation, performance, or nonperformance of this Agreement involving or affecting the Parties should first be submitted to the Director of MDOT, The Director of the RCOC and the Deputy County Executive for Economic Development, who should promptly meet and confer in an effort to resolve such dispute. If they cannot resolve the dispute in ten (10) business days, the dispute may be submitted to the signatories of this Agreement or their successors in office, who may confer in an effort to resolve such dispute.

10. **TERMINATION OR CANCELLATION OF AGREEMENT**.

    10.1. Any Party may terminate or cancel this entire Agreement upon ninety (90) days written notice, if either Party decided, in its sole discretion, to terminate this Agreement, for any reason including convenience.

    10.2. The effective date of termination and/or cancellation shall be clearly stated in the written notice. Either the County Executive or the Board of Commissioners is authorized to terminate this Agreement on behalf of County under this provision.

11. **DELEGATION OR ASSIGNMENT**. Neither Party shall delegate or assign any obligations or rights under this Agreement without the prior written consent of the other Party.

12. **NO EMPLOYEE-EMPLOYER RELATIONSHIP**. Nothing in this Agreement shall be construed as creating an employee-employer relationship between County and Public Body.

13. **NO THIRD PARTY BENEFICIARIES**. Except as provided for the benefit of the Parties, this Agreement does not and is not intended to create any obligation, duty, promise, contractual right or benefit, right to indemnification, right to subrogation, and/or any other right in favor of any other person or entity.

14. **NO IMPLIED WAIVER**. Absent a written waiver, no act, failure, or delay by a Party to pursue or enforce any rights or remedies under this Agreement shall constitute a waiver of those rights with regard to any existing or subsequent breach of this Agreement. No waiver of any term, condition, or provision of this Agreement, whether by conduct or otherwise shall be deemed or construed as a continuing waiver of any term, condition, or provision of this Agreement. No waiver by either Party shall subsequently affect its right to require strict performance of this Agreement.

15. **SEVERABILITY**. If a court of competent jurisdiction finds a term or condition of this Agreement to be illegal or invalid, then the term or condition shall be deemed severed from this Agreement. All other terms, conditions, and provisions of this Agreement shall remain in full force.

16. **PRECEDENCE OF DOCUMENTS.** In the event of a conflict between the terms of and conditions of any of the documents that comprise this Agreement, the terms in the

Agreement shall prevail and take precedence over any allegedly conflicting terms in the Exhibits or other documents that comprise this Agreement.

17. **CAPTIONS**. The section and subsection numbers, captions, and any index to such sections and subsections contained in this Agreement are intended for the convenience of the reader and are not intended to have any substantive meaning. The numbers, captions, and indexes shall not be interpreted or be considered as part of this Agreement. Any use of the singular or plural, any reference to gender, and any use of the nominative, objective or possessive case in this Agreement shall be deemed the appropriate plurality, gender or possession as the context requires.

18. **FORCE MAJEURE**. Notwithstanding any other term or provision of this Agreement, a Party shall not be liable to the other Parties for any failure of performance hereunder if such failure is due to any cause beyond the reasonable control of that Party and that Party cannot reasonably accommodate or mitigate the effects of any such cause. Such cause shall include, without limitation, acts of God, fire, explosion, vandalism, national emergencies, insurrections, riots, wars, strikes, lockouts, work stoppages, other labor difficulties, or any law, order, regulation, direction, action, or request of the United States government or of any other government. Reasonable notice shall be given to the affected Parties of any such event.

19. **NOTICES**. Notices given under this Agreement shall be in writing and shall be personally delivered, sent by express delivery service, certified mail, or first class U.S. mail postage prepaid, and addressed to the person listed below. Notice will be deemed given on the date when one of the following first occur: (i) the date of actual receipt; (ii) the next business day when notice is sent express delivery service or personal delivery; or (iii) three days after mailing first class or certified U.S. mail.

    19.1. If Notice is sent to County, it shall be addressed and sent to: County Executive, Oakland County, 1200 North Telegraph Road, Pontiac, Michigan, 48341, and to Chairperson of the Oakland County Board of Commissioners, 1200 North Telegraph Road, Pontiac, Michigan 48341.

    19.2. If Notice is sent to MDOT, it shall be addressed to: MDOT Director State Transportation Building 425 W. Ottawa St., P.O. Box 30050,Lansing, MI 48909

    19.3. If Notice is sent to RCOC it shall be addressed to: RCOC Director, 31001 Lahser Road, Beverly Hills, Michigan, 48025.

    19.4. If Notice is sent to the PPB it shall be addressed to: INSERT

    19.5. Any Party may change the individual to whom Notice is sent and/or the mailing address by notifying the other Parties in writing of the change.

20. **GOVERNING LAW/CONSENT TO JURISDICTION AND VENUE**. This Agreement shall be governed, interpreted, and enforced by the laws of the State of Michigan. Except as otherwise required by law or court rule, any action brought to enforce, interpret, or decide any Claim arising under or related to this Agreement shall be brought in the appropriate Michigan Courts, as dictated by the applicable jurisdiction and venue of the court.

21. **ENTIRE AGREEMENT**.

21.1. This Agreement represents the entire agreement and understanding between the Parties regarding the specific services described in the attached Exhibits. With regard to those services, this Agreement supersedes all other oral or written agreements between the Parties.

21.2. The language of this Agreement shall be construed as a whole according to its fair meaning, and not construed strictly for or against any Party.

IN WITNESS WHEREOF, _____ hereby acknowledges that he/she has authority to execute this Agreement on behalf of the Michigan Department of Transportation and hereby accepts and binds the Michigan Department of Transportation to the terms and conditions of this Agreement.

EXECUTED:_____ DATE:_____

WITNESSED:_____ DATE:_____

IN WITNESS WHEREOF, _____ hereby acknowledges that he/she has been authorized by the Road Commission for Oakland County to execute this Agreement on behalf of the Road Commission for Oakland County and hereby accepts and binds the Road Commission for Oakland County to the terms and conditions of this Agreement.

EXECUTED:_____ DATE:_____

WITNESSED:_____ DATE:_____

IN WITNESS WHEREOF, Mr. L. Brooks Patterson, Oakland County Executive, hereby acknowledges that he has authority to execute this Agreement on behalf of Oakland County, and hereby accepts and binds Oakland County to the terms and conditions of this Agreement.

EXECUTED: _____ DATE:_____

L. Brooks Patterson
Oakland County Executive

WITNESSED: _____ DATE:_____

IN WITNESS WHEREOF, _____ hereby acknowledges that he/she has been authorized by a resolution of the PPB to execute this Agreement on behalf of PPB, and hereby accepts and binds PPB to the terms and conditions of this Agreement.

EXECUTED:_____ DATE:_____

WITNESSED:_____ DATE:_____

EXHIBIT I
TO THE PPB AGREEMENT

RESPONSIBITILTIES OF THE PPB

APPENDIX

KEY FCC COMMUNICATIONS

June 29, 2016

Marlene H. Dortch, Secretary
Federal Communications Commission
445 12th Street, SW
Washington, D.C. 20554

VIA ELECTRONIC DELIVERY

Re: ET Docket No. 13-49

Revision of Part 15 of the Commissioner's Rules to Permit Unlicensed National Information Infrastructure (U-NII) Devices in the 5 GHz Band

Ms. Dortch,

By this submission, The Oakland County Connected Vehicle Task Force[1] and the supporting entities that have co-signed this letter respectfully respond to your Public Notice FCC 16-68 of June 1, 2016, inviting interested parties to update and refresh the record on the status of potential spectrum sharing solutions between proposed Unlicensed National Information Infrastructure (U-NII) devices and Dedicated Short Range Communications (DSRC) operations in the 5.850-5.925 GHz (U-NII-4) band.

Beginning in the middle of p. 7 of FCC 16-68, a number of important questions are raised. We believe that these questions can be satisfactorily answered on the basis of a methodology that does not rely on spectrum sharing but rather on a technological *ecosystem* that preserves the integrity of the DSRC spectrum and leverages the existing protocol architecture (IEEE 802.11p, IEEE 1609) so as to enable applications that can generate the revenues needed to fund the deployment of roadside infrastructure (RSUs). We offer a detailed response to these questions further below in this submission, but first we present an overview of the background, rationale and policy goals of our proposed methodology, an outline of which is provided in the Attachment.

[1] Oakland County, Michigan is home to 75 of the top 100 global automotive suppliers and more than 50% of the R&D centers bringing connected/autonomous technology to market. The Task Force, convened by the County Executive, is a collaboration of more than 15 public and private entities striving to build a sustainable business case for CAV VtoI deployment. Its membership includes RCOC and MDOT representation and chief technology officers from entities such as Lear, HNTB, IHS, and Mobile Comply.

Overview

We are acutely aware of the imperative that the rising value of spectrum imposes on our industry. We understand that the allocation of the DSRC spectrum comes with an obligation to ensure that the full benefits of its use, both in terms of safety and mobility on our roadways, are realized as quickly as possible. We believe that this obligation is shared by both the automotive industry and the public sector entities with jurisdiction over the building and maintenance of our roadways.

The Oakland County Connected Vehicle Task Force was established with the express purpose of formulating a business model and a technological ecosystem, based entirely on the DNA of DSRC and the WAVE (IEEE 1609 and 802.11p) standards, whereby the different constraints under which the private and public sectors must operate are reconciled. As the jurisdiction with the highest concentration of automotive industry corporate presence in the United States, our public officials are particularly well-placed to appreciate the needs of both sectors. There is an urgent desire to harness the full power of DSRC technology without imposing a burden on taxpayers, while simultaneously creating conditions that motivate the private sector to continue to invest in innovation built on the DSRC platform. The extraordinary level of response to the USDOT Smart Cities Challenge issued last December by Secretary Foxx clearly demonstrates that our goals reflect those of many other jurisdictions throughout the country.

From the outset, our view has been that the DSRC spectrum is essentially a public good which, if exploited in a way that maximizes its market value, provides the means to bridge the funding gap for deployment of roadside infrastructure that has been recognized by most DSRC stakeholders as the most important question needing resolution in order to move forward. We also believe that the tools required to accomplish this can be developed based on the inherent capabilities designed into the WAVE standards. Our formula for reaching these goals is straightforward:

- Propose the establishment of a regional public sector authority to oversee the deployment and maintenance of DSRC infrastructure

- Encourage the private sector to create tools to leverage the non-safety-critical DSRC channels (Service Channels), particularly aimed at exploiting the insatiable consumer demand for mobile wireless Internet services.

- Require all the access points (RSU) and clients (OBU) to adhere strictly to the existing 5.9 GHz DSRC communications protocol. This ensures that both non-safety of life and imminent crash avoidance applications are simultaneously supported as originally envisioned in the band plan and avoids compromising the substantial investment in development and testing incurred by both the federal government and the automotive industry during the last decade.

- Seek to establish policies placing a priority on the need for re-investment in DSRC infrastructure of revenues associated with provision of Internet connectivity services, while enabling the private sector to profit from development of the tools and their application in providing market-driven services.

- Create an ecosystem favorable to the rapid introduction of aftermarket on-board units (OBUs) which (we believe) is essential for accelerating the timetable by which the full benefits of DSRC V2V and V2I can be realized.

- Establish a foundation on which an infrastructure Authority and/or Network Operator can grow to encompass the region of southeast Michigan and hopefully demonstrate a functional model for other regions to follow.

- Demonstrate that this method can become a template for both inter-governmental cooperation, as well as public-private partnership that can be used throughout the United States.

FCC 16-68 Q&A

We are proposing an approach to use of the DSRC spectrum that would preserve the existing FCC licensing rules. With this approach, devices not licensed for DSRC are never allowed access to DSRC spectrum. If a Smartphone or Tablet runs an application that can be routed by a neighboring OBU through an available Service Channel, we can monitor the resulting consumption of bandwidth, which become the basis of our ability to leverage part of the spectrum and therefore aim for financial self-sustainability.

Our proposal calls for Internet traffic from a 3rd party device to be redirected to the IPv6 interface defined in WAVE, but since it is the OBU that actually transmits and receives at the PHY level of the protocol stack, there is absolutely no interference with time critical applications. Prioritization of this traffic and channel selection for its transmission is carried out by the WME (WAVE Management Entity), in accordance with the policies governed by IEEE 1609.4. In other words, all Internet traffic carried either for applications running in the OBU itself, or on behalf of 3rd party devices, is subject to the policies governing the infrastructure operation, which will ensure that whenever and wherever Service Channels are needed for safety-of-life, collision avoidance or any other time-critical traffic management applications, lower priority traffic will be superseded by the more important traffic.

Under our proposed scheme, many of the questions put forward in FCC 16-68 become moot. Nevertheless we have chosen to offer commentary on all of the questions which are excerpted from FCC 16-68 and reproduced below in italics and then followed by our response.

As described above, each proposed sharing approach relies on a different mechanism to avoid co-channel operations when DSRC channels are in use at a given location. We now seek comment on the merits of these two approaches. What are the benefits and drawbacks of each approach?

Neither of the currently proposed spectrum sharing approaches offer financial benefits to "roadway management" jurisdictions for funding the all-important roadside infrastructure. We do not believe that there are any benefits, with either of these proposals, which would outweigh the benefits of our approach in terms of providing revenue tools to local roadway management authorities and/or Network Operators for deployment and operation of DSRC infrastructure.

Would one approach be better than the other (e.g., minimize the risks of interference to DSRC more effectively while providing a comparable degree of meaningful access to spectrum for unlicensed devices)?

For reasons explained further below, we are skeptical that the "detect and vacate" method will perform adequately when tested with a realistic number of DSRC and UNII devices. So whereas we oppose both schemes, when compared to each other, "re-channelization" is better than "detect-and-vacate" but presents other challenges to the transportation industry already working to deploy hardware.

For either approach, is it necessary for the Commission to specify all the details of the interference avoidance mechanism in the FCC rules or can this be addressed by relying primarily on industry standards bodies to develop the specific sharing methods?

The failure of the IEEE 802.11p "Tiger Team" to reach a consensus on the question of spectrum sharing does not augur well for the idea of deferring to standards bodies to establish an interference avoidance mechanism.

If the former, what specific technical details need to be specified in the FCC rules (e.g., out of bound emissions, noise tolerance, detection threshold, channel vacate time, etc.)?

Since we advocate against spectrum sharing at the PHY level, establishing a new set of rules is unnecessary. However, we wish to point out that the "detect and vacate" method specifies that "detection" applies only to the preamble of an IEEE 802.11p packet transmission. During the remainder of the time required for its transmission, the IEEE 802.11p packet could be exposed to co-channel interference from U-NII devices. In order to avoid this exposure, U-NII devices would have to remain silent for the period of time (measured relative to the last detected 802.11p preamble) required for transmitting the maximum possible size of an 802.11p packet. But it is not clear whether the Cisco solution takes this into account. Furthermore, it would appear that the "vacate" part of the operation is delayed until after the end of any current U-NII transmission. It is therefore reasonable to speculate that, for a large number of U-NII devices within range of DSRC devices, this behavior may result in some significant loss of throughput for DSRC.

Has industry agreed upon performance indicators for DSRC, and if so, what are these metrics and is there a process to hold products to these performance levels?

We believe this was all established within the framework of Collision-Avoidance Metrics Partnership (CAMP) – but would be better answered by OEM's and Tier 1 Suppliers.

We also seek comment on how the choice of avoidance protocol affects the deployment and performance of DSRC. Would "re-channelization" require any change in the design of the DSRC electronic components contained in DSRC prototypes or just require a change in the processing of the data?

In principle, it should be possible to accommodate, in software, the different widths for safety and non-safety channels within a single DSRC PHY. We should point out however that this would appear to be of little consequence to the originator of the re-channelization scheme. Qualcomm introduced a new chipset early this year that supports 5 GHz WiFi, LTE and DSRC, a platform aimed at enabling Internet connectivity from the car through cellular communications while confining DSRC capability to safety applications. In this context, there is no need for the DSRC Service Channels, so the result is a de facto dedication of the spectrum to WiFi. Meanwhile vehicles enabled for DSRC but without the dual mode capability offered by Qualcomm, would have to contend for the two 20 MHz Service Channels, thereby reducing the capacity to provide mobile Internet services through the DSRC infrastructure and limiting the capacity to pay for infrastructure through leveraging of the Service Channels. We also have serious concerns that the integration of unlicensed WiFi and DSRC Medium Access Control (MAC) layers in the same platform creates a new cyber-attack surface that could undermine the extensive security provisions designed into WAVE.

We seek comment on whether changing the channel plan would require re-testing of DSRC and, if so, precisely what would need to be done, why, and in what timeframe? Commenters responding to this question should provide specific information about why the completed tests are not applicable to re-channelization, how any new tests will differ from those already performed, and the relevant timeframes for completing these specific tasks.

We believe that this question would be better answered by OEM's, Tier One Suppliers and others working diligently in the pursuit of deploying vehicle hardware and infrastructure test beds. *Further, any testing, studies or analyses that have been performed regarding DSRC capabilities,*

Wi-Fi performance, interference studies or the potential benefits or drawbacks of sharing, which are relied upon by stakeholders in this proceeding, either in the past or going forward, need to be filed in the record to be considered. Additionally, has any testing been done regarding DSRC self-interference or potential harmful interference with satellite and government co-channel or adjacent users? [Any such information filed should include the test plans, results, and underlying data needed to fully evaluate the submission. If there are data or reports that are not public, parties should describe the data and reports and explain why it is necessary to submit this

information confidentially].

We believe this that testing was also carried out within CAMP but also feel that this question would be better answered by OEM's, Tier One Suppliers and others working diligently in the pursuit of deploying vehicle hardware and infrastructure test beds.

We also seek comment on what DSRC-related use cases should be expected and permitted in this band. Commenters should provide specific information regarding what DSRC applications are anticipated, what are the projected spectrum needs for each application, and how would the commenter classify each (i.e., safety, non-safety, time critical or not)?

We believe that the most significant use case is now the provision of mobile Internet services offered to non-DSRC devices which have attached themselves to a DSRC OBU. This establishes a foundation for providing Internet Connectivity over Service Channels when applications use the IPv6 interface to the WAVE stack, whether they are running locally or routed through the OBU from a neighboring device in the vehicle.. The Internet Connectivity services are announced by RSUs using WAVE Service Advertisements (WSAs). Furthermore, individual infrastructure authorities would have the discretion to offer service from specific RSUs at specific times, giving them the freedom to implement their own policy options. When policy dictates that these services be suspended to make way, on the supporting Service Channels, for higher priority applications, the OBU can detect that the Provider Service Identifier (PSID) has been removed from the WSAs it receives from the RSU and then change the ``transmitter profile`` it registers with its MAC Layer Management Entity (MLME) so that the WME no longer allows IPv6 traffic on the Service Channel in question.

Obviously these mobile Internet services are not time critical nor are they safety-related (except in the most general possible sense when supporting such purposes as real-time navigation). However, they are critical to enabling infrastructure authorities to finance their own roadside deployments.

Should the DSRC offerings provided on a priority or exclusive basis be restricted to safety-of-life or crash avoidance purposes?

The WAVE standards already allow for prioritization of different services based on the Provider Service Identifier (PSID) identified in the WSA. IEEE 1609.12 provides a standardized framework for allocation of a PSID. In other words, the flexibility to establish whether a specific service should have priority or exclusivity is already built into the system specifications. We believe that there is no need for a "one size fits all" set of rules.

What are the technical or policy reasons for differentiating between safety-of-life and non-safety-of-life applications?

The technical reasons are clear. Non-safety-of-life applications should never have a deleterious

impact on the latency of safety-of-life applications. The policy reason is that we believe that the use of non-safety-of-life spectrum should be managed in a way that leads to funding of infrastructure.

Are there meaningful distinctions between DSRC applications that are safety-related and those that are not, such as applications that are time critical?

Possibly; e.g. the benefit of time-critical Signal Phase and Timing (SPaT) messages from signalized intersections applies as much to optimizing mobility (reduced travel time, greenhouse gas emissions, etc.) as to improving safety.

For parties that advocate for re-channelization, is there a natural bifurcation point if we decide to separate safety-related and non-safety-related DSRC? For instance, while entertainment, social media, maps, and parking applications are not safety-related, what is a good definition for a feature or service to be considered truly a safety-of-life use?

We do not believe that there is a natural bifurcation point. We strongly believe that the establishment of any "bifurcation point" would irreversibly eliminate the option to re-allocate non-safety related channels to accommodate the future potential needs of time-critical applications. For instance, there may be a future requirement to remove the SPaT messaging load from the V2V channel (172) and re-allocate it to a Service Channel. The potential to develop safe and reliable vehicle autonomy is likely to be enhanced with the availability of low latency signalling from roadside infrastructure, not only intersection controllers but also movable infrastructure such as lane closure signals. We must maintain the flexibility, as the needs of urban traffic congestion and autonomous vehicle engineering arise, to meet these needs by assigning a Service Channel that currently only carries traffic that is not time-critical. This will not be possible if unlicensed devices are allowed to operate in these channels.

How does our current band plan and these sharing approaches match up with international efforts for safety-related DSRC systems?

We believe that this question would be better answered by OEM's, Tier One Suppliers and others working diligently in the pursuit of deploying vehicle hardware and infrastructure test beds.

To help us fully evaluate the potential effects of re-channelization, please provide the projected timeframe for introduction of DSRC deployments under the current channel plan. What market penetration (e.g., percentage of cars on the road) is needed for DSRC to reliably provide safety-of-life functions or prevent vehicle-to-vehicle collisions?

The conventional wisdom is that concrete benefits are realizable with less than 25% penetration. However it is important to realize that aftermarket devices can accelerate the rate of penetration and the potential exists to introduce these in the very short term. Given the need for a new iteration of testing, we believe that re-channelization would introduce unwarranted delay in the

development of the V2V market and push the realization of safety benefits further into the future.

What are the projected timeframes for achieving the penetration levels needed for each safety-of-life or crash avoidance function to be effective?

The time horizon for achieving "critical mass" needed for safety benefits is inter-dependent with the deployment of roadside infrastructure. We believe that these are linked in a "virtuous circle".

Will these penetration levels be met by equipment that is native to the automobile or through standalone or retrofit devices? Would these timeframes change if re-channelization occurs and by how much?

As previously indicated, aftermarket devices are necessary to achieve the required penetration levels sooner rather than later. But whereas the near-term availability of aftermarket equipment may be nullified by the adoption of the re-channelization scheme and the testing required for it, we cannot gauge the impact on timeframes.

In the meantime, what other spectrum bands, driver-assist technologies, and commercial offerings are providing similar services to those envisioned using DSRC?

The relationship of ADAS (advanced driver assist systems) to DSRC is discussed throughout the so-called "V2V Readiness Report" published by NHTSA in August of 2014. The general view expressed in this report, and which is echoed in the automotive industry, is that ADAS and DSRC are complementary, and not necessarily substitutes for one another. However, in the case of ATIS (advanced traveller information services) envisioned using DSRC, particularly with respect to real-time navigation, it is widely accepted that LTE-based commercial services (e.g. WAZE) have made significant progress in providing equivalent functionality. Nevertheless, we believe that in this area, LTE and DSRC can be complementary rather than competitive, where the common ground is found in the standardized messaging formats established by SAE J-2735. The complementarity of LTE and DSRC is a basic tenet of the USDOT Connected Vehicle Reference Information Architecture (CVRIA), to which we intend to adhere to in our infrastructure deployment and operations plan.

Is it possible that autonomous car and other technologies could bypass DSRC safety-of-life capabilities prior to reaching a sufficient technology penetration to make this service effective?

We prefer to view this question from the perspective of the complementarity of DSRC and vehicle autonomy. The development of reliable vehicle autonomy is linked to the availability of DSRC infrastructure. Whereas fully autonomous vehicles (Level 5) must be independent of DSRC infrastructure, the intermediate levels on the path to full autonomy can all benefit from both DSRC infrastructure and a growing fleet of DSRC-enabled vehicles.

Does the 5.850-5.895 MHz portion of the band potentially offer the most value for unlicensed

operations?

No. As previously stated, we believe that "unlicensed operations" should be enabled at the Internet layer, not by allowing actual spectrum sharing but by granting access to mobile Internet services (advertised by RSUs) for non-DSRC devices attached to OBUs .

What are the advantages and disadvantages of combining the non-safety-related channels into larger channels?

Larger channels provide for greater throughput but at shorter distances. The re-channelization scheme therefore appears well-suited to a technology platform that enables an in-vehicle WiFi access point (AP) with an LTE connection to the Internet. But where the connectivity to the Internet is established through DSRC, a narrower channel width is more effective at the longer distances typically separating the vehicle from the RSUs that are equivalent to WiFi APs. So there are disadvantages to the re-channelization scheme on several levels. The larger channels are less effective in providing Internet connectivity through DSRC infrastructure and, as we have already indicated above, the unlicensed use of non-safety-related spectrum reduces the effective bandwidth available to pay for DSRC infrastructure.

How should portions of the band not required for safety-of-life applications be shared among DSRC and unlicensed operations?

As previously indicated, we believe that "sharing" should be enabled at the Internet layer and that actual sharing of spectrum at the PHY layer should be avoided.

For instance, should non-safety of life DSRC applications share the lower re-channelized band on an equal basis with unlicensed operators or have some priority?

If we define an "unlicensed operator" as simply a device with connectivity to the IoT through a licensed device, re-channelization is unnecessary. Non-safety DSRC and non-DSRC applications can effectively share the Service Channels of the DSRC spectrum. Also, the IEEE 1609 suite of specifications (particularly IEEE 1609.4) already provide mechanisms for prioritization of applications based on the Provider Service Identifier (PSID).

If commercial or other non-safety DSRC applications have priority access to the band, is a detect-and-vacate protocol necessary or does the IEEE 802.11 standard or other protocols allow for prioritization of DSRC traffic without the need to vacate non-safety channels for a pre-determined time period?

It is the "detect-and-vacate" obligation imposed on unlicensed devices (assuming that it will work effectively) that is supposed to be the guarantor that DSRC applications (regardless of criticality) have "priority access to the band". Without "detect-and-vacate", ensuring access to the band would be analogous to trying to ensure safety at a blind intersection where the traffic lights are not working.

In addition, we invite interested parties to suggest other approaches that would facilitate unlicensed use of the 5.850-5.925 GHz band without causing harmful interference to DSRC operations. Would a hybrid approach taking elements from both the "detect and avoid" and the "re-channelization" proposals create benefits for both DSRC and U-NII users?

For example, are there advantages to an approach where unlicensed users and DSRC non-safety of life applications would share access to the lower 45 megahertz of DSRC spectrum, while unlicensed devices would use a "detect and avoid" approach to avoid, and thus protect, co-channel safety-of-life DSRC operations in the upper 30 megahertz of spectrum?

We do not believe that this would be beneficial for several reasons. First, there is a fundamental "opportunity cost" to allowing unlicensed devices to operate on spectrum that could otherwise be leveraged by infrastructure authorities. The alternative we propose is superior to this concept, for the financial reasons already cited. But even if the opportunity cost was not a factor, one of the benefits of re-channelization is that it obviates the need for "detect and vacate" hardware in U-NII devices. Allowing co-channel operations in the upper 30 MHz would simply re-introduce that need, thus nullifying the benefit sought by re-channelization.

Is it feasible to develop a "hybrid chip" that would implement a DSRC standard receiver for detection purposes to allow unlicensed use, if the spectrum is clear?

As indicated previously, Qualcomm announced this kind of product at CES in January 2016, supporting both 5 GHz WiFi and DSRC.

Would it be viable to employ an approach based on use of a database to control access to the spectrum similar to that used for the Citizens Broadband Band Radio Service at 3.5 GHz or for White Space devices in the TV and 600 MHz Service bands?

Not only would it be viable, it would be necessary so that the infrastructure authority would have the option to apply billing charges for bandwidth.

The undersigned do hereby support and ask that the comments and responses set forth herein be made part of the record and given due consideration by the Commission.

L. Brooks Patterson
Oakland County Executive

Fred Nader – Chairman
Oakland County Connected Vehicle
Task Force

Dennis G. Kolar, P.E.
Managing Director
Road Commission for Oakland County

Kirk Steudle, P.E.
Director
Michigan Department of Transportation

Elaina Farnsworth
CEO, Mobile Comply

Gregory D. Krueger, P.E.
Associate Vice President - HNTB Corp.
Emerging Technology Program Director

Paul Haelterman
Vice President & Managing Director
Automotive Advisory Services
IHS Automotive

Martin Nathanson
CTO
Paxgrid Telemetric Systems

Doug Patton
Executive Vice President, Engineering Division
Chief Technical Officer
DENSO International America

Jim Santilli
Chief Executive Officer
Traffic Improvement Assoc. of Michigan

Praveen Singh
Vice President Connectivity
Lear Corporation

Jeff Varick
President and Founder
Brandmotion LLC

Attachment: **Proposed scheme for extending Internet Connectivity to non-DSRC Devices**
Controlled by Infrastructure Authority: policy reflected in WAVE Service Announcements (WSAs) from RSU

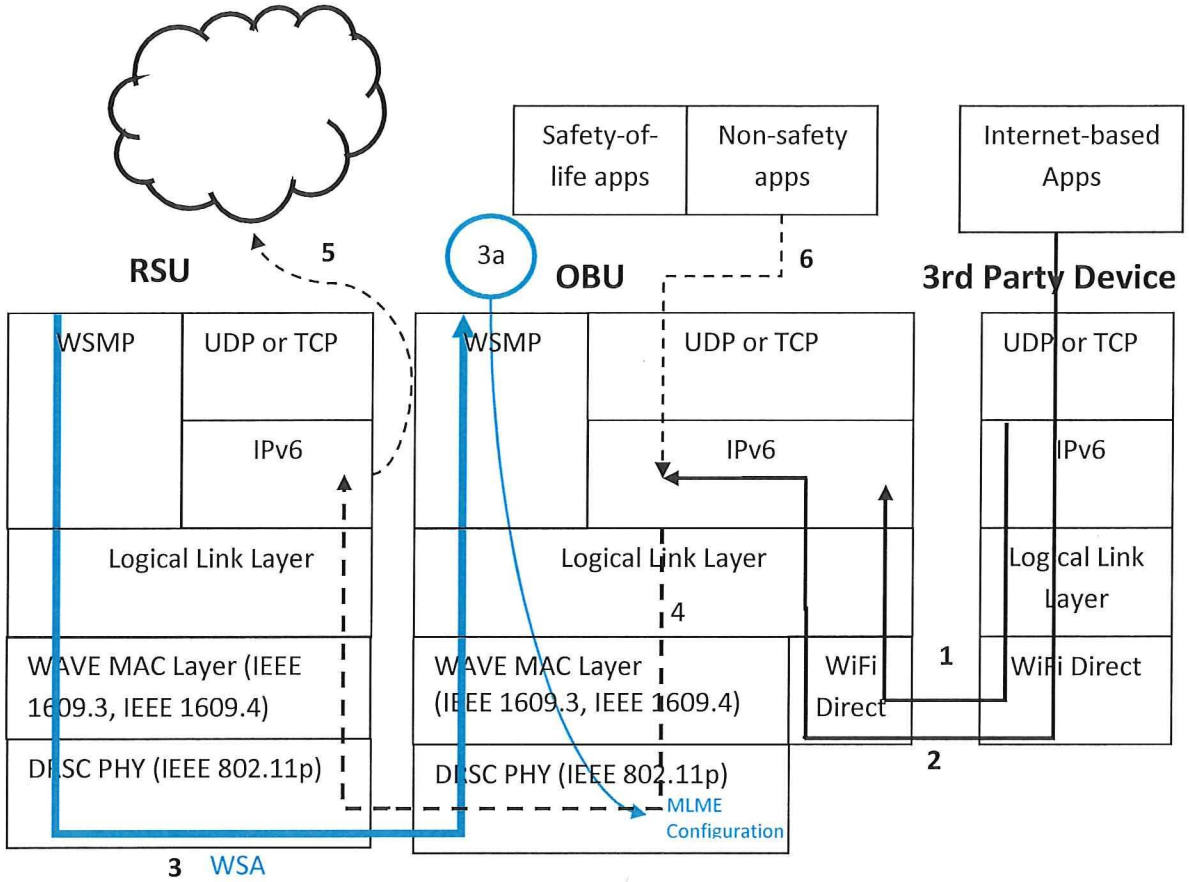

The figure above provides a very high level view of the functional and process architecture of the OCCV proposal.

In step 1, a third party device attaches itself to an OBU through a WiFi PeertoPeer (WiFi Direct) interface, using the "discovery" and "address configuration" methods specified in IPv6 . The WiFi Direct interface may operate in 5 GHz but not overlapping the DSRC spectrum.

In step 2, the third party device wants to send IPv6 traffic to a remote Internet host, so it routes it through the OBU.

Step 3 shows a periodic WAVE Service Advertisement (WSA) from the RSU, identifying which services are locally available. Infrastructure authority/operator may make a policy-based decision to enable/disable Internet Connectivity. The process 3a running in the OBU implements this policy by reconfiguring the channels available for selection in the MAC Layer Management Entity (MLME).

In step 4, if the most recent WSA indicates that the service is available, the OBU routes the IPv6 traffic to the RSU, using the Service Channel specified for this.

In step 5, if the RSU is currently configured to support Internet Connectivity, it routes the IPv6 traffic to the Internet towards the remote host.

The reverse communications path, from the cloud to the RSU to the OBU and then back to the external 3rd party, can be illustrated simply by reversing the direction of the arrows and the numbering of the steps.

Step 6 illustrates the instance of a non-safety-of-life application, resident in the OBU, generating IPv6 traffic. This path of communications is identical to the path for IPv6 traffic from the external (3rd party) device, demonstrating that all IPv6 traffic is governed by the same MAC and PHY protocols.

OAKLAND COUNTY MICHIGAN

L. BROOKS PATTERSON, OAKLAND COUNTY EXECUTIVE

October 31, 2016

Via Electronic Filing

Marlene H. Dortch, Secretary
Federal Communications Commission
Office of the Secretary
445 12th Street, SW
Washington, DC 20554

Re: Revision of Part 15 of the Commission's Rules to Permit Unlicensed National Information Infrastructure Devices in the 5 GHz Band

ET Docket No. 13-49

Dear Secretary Dortch:

In its Ex Parte letter to the FCC of October 11, 2016, Public Knowledge (PK) cites, among other proceedings, the above-referenced docket, in association with its earlier Petition for Rulemaking and Request for Emergency Stay of Operation of Dedicated Short-Range Communications (DSRC) Service in the 5.850-5.925 GHz Band (5.9 GHz Band), filed jointly by PK and the Open Technology Institute (OTI) on June 28, 2016.

In the letter of October 11, PK asserts that no opponent of their Petition:

- defended commercial use (other than CTIA or Cellular Telephone Industries Association)
- explained how commercial use is consistent with cyber-security provisions for safety-of-life apps
- how commercial use is consistent with public interest

The Oakland County Connected Vehicle (OCCV) Task Force, along with the co-signatories below, including DSRC stakeholders from both the public sector and the automotive industry, hereby respond to these assertions.

What was (is) the actual purpose of the PK/OTI Petition?

Since the publication of the PK/OTI Petition, and the subsequent FCC Public Notice of July 25, 2016, we have been witness to a steady stream of Ex Parte notices from PK/OTI, often, although submitted under the 13-49 proceeding, addressing the RM-11771 proceeding within the same document. These organizations seem to be blessed with a boundless energy to devote to the pursuit of protecting the 4th amendment rights of Americans and we applaud this level of dedication.

However, the original purpose stated in the Petition appears to have receded into the background, only to be replaced by an agenda that was only peripherally discussed in the June 28 document, namely that DSRC will be used for commercial purposes, which contravenes the fundamental rationale for the 1999 FCC allocation of spectrum.

Review of the Summary of the Petition indicates that PK/OTI were arguing that:

- when it allocated DSRC spectrum in 1999, the FCC failed to address the issue of cyber-security (an irrelevant point since it applied 20/20 hindsight to an issue that, in any event, did not require in-depth treatment by the FCC at the time of the 1999 decision, and was more than adequately addressed by the exhaustive standardization work done by the IEEE in subsequent years)

- "far more troubling" was the (apparent) failure to impose adequate cyber-security obligations on DSRC licensees (an assertion that has subsequently been shown, in several of the opposing responses submitted under the RM-11771 proceeding to the FCC, to be false)

- "even more troubling" was the conclusion that the car industry exhibits neither the capacity nor proclivity to care about, or deal adequately with, cyber-security threats (an assertion that the OCCV Task Force showed in our response of August 21, 2016, to be a "guilt-by-association" allegation, attempting to exploit fears of cyber-threats, fueled by media reports of staged events in order to summarily dismiss years and millions of dollars expended to ensure that DSRC is properly inoculated against such threats)

- finally, there was the highly sensationalized suggestion that DSRC had the potential to be "weaponized", based on the claim that "DSRC units provide an access route for malware to spread directly from car to car" (an assertion that, not only OCCV but many other respondents to the RM-11771 proceeding, showed to be a notion entirely unencumbered by actual knowledge of the mechanisms of V2V communications)

In the October 11 letter, which is presented as a de facto set of minutes of a meeting which PK held with FCC officials on October 6, the primary focus of the argument for the Petition seems to have shifted towards the concern that part of the DSRC band will be used for illegitimate commercial purposes. Quoting the points they raised in the meeting with the FCC, they offer the breathtaking revelations that:

> *PK noted, in particular, the contradictory assertions of DSRC licensees, who argued that cybersecurity and privacy standards built into NHTSA's DSRC standards were sufficient to protect the entire band, while simultaneously insisting that the NHTSA DSRC radio would only be capable of sending basic safety messages, not of supporting any other service. This suggests the use of a separate radio, outside NHSTA's jurisdiction and solely governed by FCC service rules, for the provision of commercial services. DSRC licensees completely avoided commenting on commercial services or even admitting that those services would be carried by a radio other than the NHTSA DSRC radio.*

There are so many inaccuracies in this statement that it is challenging to know where to begin. First, it is a bit difficult to identify the parties accused of contradicting themselves. Called "DSRC licensees", they are introduced in the previous paragraph in a grammatically incoherent sentence:

> *PK observed that the bulk of the objections from parties who are neither vendors of DSRC equipment, DSRC licensees, or potential DSRC licensees (such as the California Department of Transportation) objected primarily to the Commission's continued use of its privacy and cybersecurity authority, recently reaffirmed....*

Second, notwithstanding the convoluted identification of strawmen, whose opposition to their Petition we are asked to reject as "contradictory", the views of DSRC vendors such as GM, and the IEEE 1609 Working Group (which specified the

DSRC protocol stack), should be deemed reliable sources of technical information regarding the capabilities of a DSRC radio. It is also the case that none of the expressed opposition to the Petition from parties such as the ones we have named above, supports the claims that a DSRC radio is "only capable of sending basic safety messages" and incapable of "supporting any other service", or that "this suggests the use of a separate radio".

Since the fractured language of the paragraph makes it impossible to attribute the referenced contradictions to any specific organization, the excerpt quoted above from the PK letter amounts to an unsubstantiated allusion to statements from unidentified parties. In short, there is simply no basis to the PK claims.

Knowledge Gap

What is clear, however, is that PK now appears to be willing to acknowledge that cyber-security provisions have indeed been built into DSRC, although, *as they now perceive it*, only for the V2V application. Since those provisions were made by the same entities who PK originally claimed either had failed to address cyber-security threats or were not qualified to do so, we need to ask the following question: under what authority did PK/OTI originally submit a Petition, of which the main points in its Summary have subsequently been shown to be baseless? We can further ask, under what authority do they continue to litigate these questions without even acknowledging the huge gaps in their understanding of the subject matter, gaps which are apparently being filled by digesting the responses to their Petition from the same parties (i.e. the auto industry) who they initially said were unqualified?

Having largely abandoned the rationale for alarm stated in their Petition, PK has now moved on to suggesting that the problem with the cyber-security provisions which they originally claimed were absent, is that they are not applicable to the full DSRC spectrum allocation, which casts suspicion on the vulnerability of DSRC applications which are not V2V (vehicle-to-vehicle: i.e. safety-of-life).

This exposes an obvious failure to understand the extensive technical specifications, developed by the IEEE between 2004 and 2009, to govern the use of spectrum. A full appreciation of the technological implication of these specifications, contained in the IEEE 1609 suite of standards known as Wireless Access Vehicular Environment (WAVE), requires a substantial commitment of time and intellectual effort, coupled with qualified knowledge of the engineering subject domains, including RF digital modulation, stochastic arbitration of simultaneous RF channel access by multiple

radios, communication protocol stacks (particularly Internet Protocol Version 6), advanced data encryption algorithms (both symmetrical and asymmetrical), Simple Network Management Protocol (SNMP) and Management Information Base (MIB), to cite a few examples.

A reader equipped with knowledge of these subjects would then be able to appreciate how the WAVE specifications impose, on both mobile (in-vehicle) and stationary (roadside) DSRC devices, rules, which constrain the behavior of these devices and impose on them a regime that ensures compliance with strict conditions for certification. This regime is being used by the US Department of Transportation for both mobile and stationary DSRC devices. It will also be used to ensure that all applications running on DSRC devices will be subordinated to the requirements of public sector authorities. These are the authorities responsible for the rights-of-way where DSRC infrastructure is installed, at the state, county or municipal levels of jurisdiction.

As it happens, this is the principal reason for the establishment of our Task Force: to define a regulatory and technological blueprint for inter-jurisdictional cooperation, as well as a technological partnership with vendors of both mobile and stationary DSRC devices. The development of that blueprint is nearing completion and will soon be ready to put into practice with the full cooperation of 4 different levels of jurisdiction over the roadways in our community, ranging from townships to the Michigan Department of Transportation.

Commercial Use of DSRC Spectrum

With respect to the assertions that we cited at the beginning of the present submission, the notion that commercial use is not "consistent with cyber-security provisions for safety-of-life apps" is a claim that, once again, demonstrates the tendency for PK to put forward arguments without any apparent concern for whether they can be substantiated. In our August 21 submission, we explained how, even if there were a commercialized Internet pathway into a mobile DSRC device, any such device that is properly certified according to the cyber-security provisions (that PK now acknowledges exist) would effectively stop in its tracks, any cyber-attack using the Internet pathway. Our explanation provided extensive technical detail and we recommend to anyone who is interested to take the simple step of actually reading what was written. What bears repeating, however, in the present submission, is that the existence of vulnerable cyber-attack probabilities in automotive telematics systems which are entirely based on 4G-LTE cellular

connectivity to the vehicle, **does not constitute evidence that there are similar vulnerabilities in DSRC**. On the contrary, it should demonstrate that the practitioners of DSRC have been very careful to avoid the mistakes that the cellular industry has continued to make in its forays into automotive telematics. PK must be exhorted to stop using this completely unwarranted tactic of "guilt-by-association".

While there has been no explicit defense of commercial use of the spectrum (with the exception of CTIA as noted by PK) nor a demonstration of how commercial use is consistent with the public interest, there has been a substantial effort to explore an innovative approach to usage and management of the spectrum, called "controlled spectrum-sharing". This concept enables the public sector to develop "Infrastructure Authorities", operating according to a business model that allows them to pursue the goal of financial self-sufficiency while maintaining the authority to control DSRC "service" channels on a dynamic basis. This authority is exercised using a control mechanism that enables complete flexibility to allow, or prohibit, specific applications on specific "service" channels, according to whatever needs are deemed to take precedence during any time window or at any location specified by the Infrastructure Authority. In our response to the FCC Public Notice 16-68 ("spectrum-sharing solutions for UNII devices in the 5.9GHz DSRC band), the OCCV Task Force described this alternative to both the Cisco-sponsored "detect and vacate" and the Qualcomm-sponsored "rechannelization" methods of spectrum-sharing. The most significant benefits of this alternative are that is does not require changes to the FCC rules, and offers a method for local jurisdictions, both state DOTs and municipalities, to finance roadside infrastructure deployment without additional burden on the taxpayer. Furthermore, in their letter of July 22, 2016, the American Association of State Highway Transportation Officials (AASHTO), expressed support for this concept and encouraged the FCC to consider it as a legitimate alternative to the interminable wrangling over alternative proposals to share the DSRC spectrum with unlicensed devices.

In our submission of June 29, 2016, we described a "technological *ecosystem* that preserves the integrity of the DSRC spectrum and leverages the existing protocol architecture (IEEE 802.11p, IEEE 1609) so as to enable applications that can generate the revenues needed to fund the deployment of roadside infrastructure (RSUs)". We went on to describe a method by which the provision of wireless Internet services to 3rd party non-DSRC devices, supported by the DSRC infrastructure and suitably configured OBUs in vehicles, provides a revenue stream to offset the cost of building and operating DSRC infrastructure. So contrary to the claim that "no one has defended commercial use of the spectrum...", we did, in fact,

propose a form of "commercial use" for DSRC spectrum but one that is subordinated to a public-private partnership framework that gives the priority to the needs of the public sector.

In our response to the PK/OTI Petition, we did not draw attention to our proposal for "controlled spectrum-sharing", because we preferred to avoid the kind of entangling of different FCC proceedings so regularly practiced by PK. Instead, we chose to focus on the primary theme of their Petition, which was that DSRC presented a threat that could become "weaponized", a form of scare-mongering in which they continue to indulge despite the belated acknowledgement that DSRC has the cyber-security provisions that they had originally claimed were absent.

Respectfully Submitted,

L. Brooks Patterson
Oakland county Executive

Fred Nader
OCCV Task Force Co-Chair

EXECUTIVE OFFICE BUILDING 41 WEST • 2100 PONTIAC LAKE ROAD, DEPT 409 • WATERFORD, MI 48328-0409 • (248) 858-0484 • FAX (248) 452-9215

OAKLAND COUNTY MICHIGAN

L. BROOKS PATTERSON, OAKLAND COUNTY EXECUTIVE

September 22, 2016

Via Electronic Filing

Marlene H. Dortch, Secretary
Federal Communications Commission
Office of the Secretary
445 12th Street, SW
Washington, DC 20554

Re: Revision of Part 15 of the Commission's Rules to Permit Unlicensed National Information Infrastructure Devices in the 5 GHz Band, ET Docket No. 13-49

Dear Secretary Dortch:

In its letter of September 6, 2016, Qualcomm presents a target list of the objections raised by the opponents of its re-channelization proposal, in order to then offer counter-arguments for each. The entries in Qualcomm's list are all related to the relative merits of re-channelization vs. detect-and-avoid (DAA), in terms of such factors as RF performance under various automotive operating conditions, cross-channel interference and the IEEE 802.11-based mechanisms for prioritization of DSRC packets in shared channels.

While there may be some value to this protracted litigation of complex technical issues, it is instructive to recall the original failure of the IEEE 802.11 "Tiger Team" to reach a consensus on spectrum-sharing. That deadlock was a harbinger of the on-going debate we are now observing. We believe, therefore, that a point of diminishing returns has now been reached in terms of continued argument.

What is inarguable is that there is an array of emerging DSRC low latency applications which will ultimately require the availability of all four so-called "service channels" in the existing band allocation (and for which the performance criteria for cannot be met by cellular technology). Re-channelization would irreversibly render it impossible to dynamically re-assign those channels, on a dedicated basis if necessary, whenever and wherever it is warranted by the demand for low latency DSRC. Furthermore, even were DSRC devices to enjoy IEEE 802-11-based priority in Qualcomm's re-channelized band, it would be in a reduced set of 2 (instead of 4) 20 MHz channels, a design which is meant to optimize the needs of mobile wireless Internet access for Qualcomm-based handsets, not to fulfill the needs of 21st century safety and mobility technology for America's increasingly congested roads.

EXECUTIVE OFFICE BUILDING 41 WEST • 2100 PONTIAC LAKE ROAD, DEPT 409 • WATERFORD, MI 48328-0409 • (248) 858-0480 • FAX (248) 452-9215

Qualcomm views the needs of DSRC as "frozen" in terms of the current dedication of 3 channels (Ch 172, Ch 178, Ch 184) to safety-of-life functionality. Re-channelization would corral them into the top of the band. But for emerging low latency applications where demand may require re-assignment of "service channels", freedom from interference by unlicensed devices must be assured. These applications (e.g. speed harmonization, queue warning, eco-drive, freight traffic signal priority, emergency vehicle pre-emption and others) will yield substantial safety benefits (resulting as well in substantial mobility and environment benefits and, as many DSRC proponents have pointed out in their submissions, any attempt to demarcate "safety" from "non-safety" applications according to channel boundaries is an artificial distinction.

DSRC equipment vendors have already implemented support for these applications in their products with the expectation that nothing will impede the harnessing of additional low-latency capacity as the market evolves, particularly the constraint of unlicensed devices contending for bandwidth at some level. If UNII-4 devices allowed into the band cannot demonstrate that they will always yield, **as needed and without any delay**, 100% of the available bandwidth, the result will undermine the capacity of DSRC to realize its full potential. The prospect of UNII-4 devices effectively closing the door to a far-ranging transformation of our roadways is the one objection, raised by multiple opponents of re-channelization, about which Qualcomm has conspicuously avoided discussion by not including in its list for counter-argument.

We respectfully suggest to the Commission that what is not said in the Qualcomm letter is as significant as what is said.

L. Brooks Patterson
Oakland County Executive

Fred Nader
Chairman
OCCV Task Force

EXECUTIVE OFFICE BUILDING 41 WEST • 2100 PONTIAC LAKE ROAD, DEPT 409 • WATERFORD, MI 48328-0409 • (248) 858-0484 • FAX (248) 452-9215

APPENDIX

ITS KOREA MODEL DEPLOYMNET

FTMS/ATMS in Korea

- Collection of Traffic Data
- Management & Operation of Arterial or Freeway
- Dissemination of Traffic Information

National Transport Information Center(NTIC)

- Collection and Distribution of traffic information and CCTV data
- Communication & Link the traffic data with other traffic center based on standardized node-link and the Standard for C2C Information Exchange
- Provide real time traffic information and monitor disaster across the country
- Manage ITS data & information collected nationwide and verify the observance of standards (In general, MLTM-affiliated organizations conduct these jobs)

Smart IC

- Connect urban road and national highway with the last mile on expressway
- Gate for Entry and Exit of expressway by using 5.8 GHz DSRC communication
- When incident happen on expressway, vehicle make a detour
- Rest area has function as a transfer station for public transportation

CCTV Incident Detection System

- Analysis Video Image of CCTV for real time detection (Signal/Video transmission, HDS)
- Minimum CCTV operation mode and incident detection mode available
- Detect the occurred events (Stopped vehicle, accident, fire, and etc. occurred on tunnel and expressway) 10 Minutes
- Improve fog and mist from image or Video streaming by fog filter algorithm

V2V service

- Information sharing between vehicles based on WAVE/DSRC (Wireless Access in Vehicle Environment)
- Traffic incident (work, accident, etc.) information is shared between the vehicles
- Realization through Smart Highway Project
  - Test driving at Yeo-ju experimental Road, Test
- C-ITS model Deployment

Parking Information System

- Estimate occupied parking space by using sensors (Open area: buried type, within the building: Infrared, IR, etc.)
- Estimate the available parking space by counting entering/exiting vehicles, occupied space
- Parking guide, using Parking Guidance System based on result of estimating parking
- Occupied parking space
- Search parking location and provide information, using automatic vehicle identification & CCTV image analysis method

V2I service

- Collection and provision of real time traffic information between RSE and OBU based on 5.8GHz DSRC communication
- Provide the traffic information for a certain geographic area
- Provide information on incidents/work zone ahead
- Support digital map, image, voice and text

ATMS/FTMS Center

- Collection and Dissemination of traffic information and CCTV data in urban, rural and national highway
  - ATMS : Parking info., Public transportation info., Traffic information service & Management of urban traffic
  - FTMS : Monitoring overall situation on expressway, bridges and tunnel
- Traffic data collection and provision based on standardized node-link
- VDS(image, loop, radar) and Probe information based on DSRC
- Sharing the information of traffic condition and incidents with other regional traffic centers, FTMS Centers, NTIC, Emergency operation centers (based on standardized node-link and the Standard for C2C Information Exchange)

ETCS (Hi-Pass)

- Non-stop, Electronic Toll Collection System based on 5.8GHz DSRC
- Dual(integrated) antenna available for both IR and W
- Card type : Pre or post-paid, Contact/Contactless

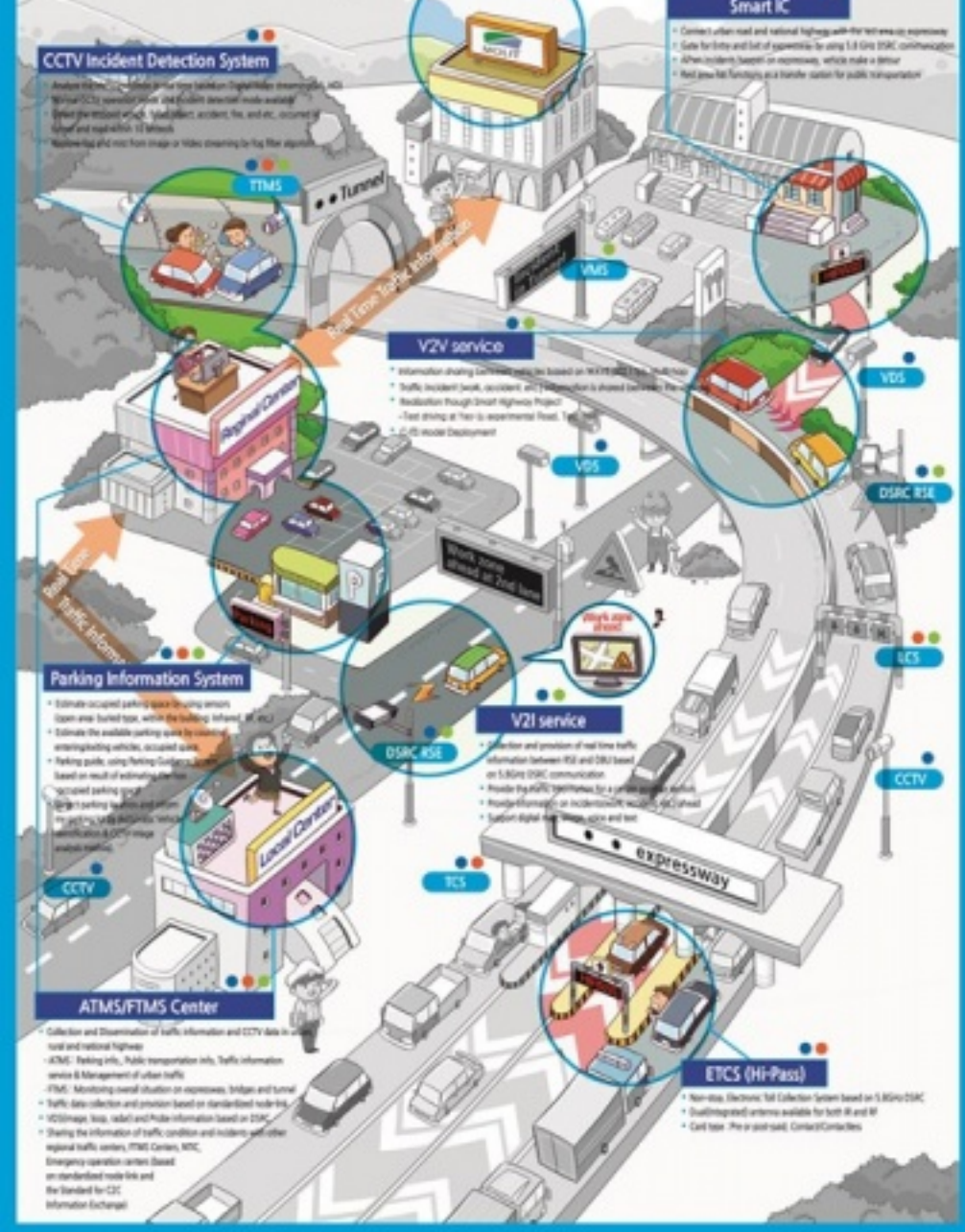

BIS/BMS in Korea

- Collection of Public Transportation Information
- Management & Operation of Public Transportation
- Dissemination of Public Transportation Information

Multimodal Transfer Station

- Multimodal transfer service system in national level among surface, air, and maritime traffic(TAGO service : Transport Advice on Going anywhere)
- TAGO (Operated by Minister of Land, Transport and Maritime Affairs
- Support transfer between modes of public transportation
  - Collect the operation & service information in real time to all public transportation modes
  - Provide transfer info. Bus to Bus (Intercity bus, city bus, village shuttle bus)
  - Provide transfer info. Bus to Subway
  - Provide transfer info. between public transportation modes
- Collect the real time transportation mode information
- Provide the location based service within the Multimodal Transfer station
  - Using Wi-Fi Position System(WPS)
  - Test bed for this service at Gimpo airport in 2011

Collection of Bus Information

- Collecting Real time Bus operation condition by using wireless communication(DSRC/CDMA/AP)
  Bus status, Traffic situation, incidents
  Tracking real time bus location by GPS

Bus-Only Lanes
(Bus Rapid Transit)

Bus Priority Signal

- When bus entering the intersection, bus priority signal turns on
- Signaling Methods
  - Priority mode
  - Pre-emption mode

Bus Management Center

- Monitoring the overall buses operating status
- Adjust and manage the interval between buses
- Bus Dispatching and Allocating
- Management and Analysis the statistics about bus operation
- Providing intercity bus services with other centers in adjacent cities

Bus Information Terminal
(user-oriented)

- Provision of Bus No., service area, routes and bus location in real time
  This information is provided to QR codes
- Verifying bus departure at each stop using DSRC, CDMA, 3G, AP
- Bus information provision in real time automatic device app or cellular phone and Internet
- Free Wi-Fi service

Bus info. Display Equipment

- Provide Bus information through LED display
  Bus No., service area and route information
  No. of passenger in the bus
  Next stop information including expected arrival time
  Transfer information between transportation modes
  Emergency calling, Bus news, weather, etc

Public Transportation Electronic Payment System

- Electronic payment system for public transportation fare (the so-called paid card, Contact or Contactless, NFC type)
- Electronic payment Traffic card, named One Card All Pass, available for all traffic mode and related services
  Bus, Subway, Taxi (Usable when transfer)
  - Parking lot and convenient facilities
- Discounted fare or no surcharge fare when transferring between modes
- Introduced in Seoul, Gyeonggi, Gwangju, Busan and etc. (Plan to be expanded nationwide by FY 2012)

OBU (On Board Unit)

- Real time communication between Bus Information Center and OBU
  Bus operation condition, traffic situation, and incidents
- Assisting in adjusting the interval between previous and next stops
- Displaying the safe speed